Changes for the Better

MITSUBISHI ELECTRIC

SPLIT-TYPE, HEAT PUMP AIR CONDITIONERS

July 2008

No. OC366
REVISED EDITION-C

HFC utilized R410A

TECHNICAL & SERVICE MANUAL

[Model name]

(Standard type)
PUMY-P36NHMU
PUMY-P48NHMU

(Salt proof type)
PUMY-P36NHMU-BS
PUMY-P48NHMU-BS

[Service Ref.]

PUMY-P36NHMU
PUMY-P48NHMU
PUMY-P48NHMU$_1$
PUMY-P48NHMU$_2$

PUMY-P36NHMU-BS
PUMY-P48NHMU-BS
PUMY-P48NHMU$_1$-BS
PUMY-P48NHMU$_2$-BS

Revision:
- 9. TROUBLESHOOING has been modified.
- Tester check point is added (PCB, FAN MOTOR).

- Please void OC366 REVISED EDITION-B.

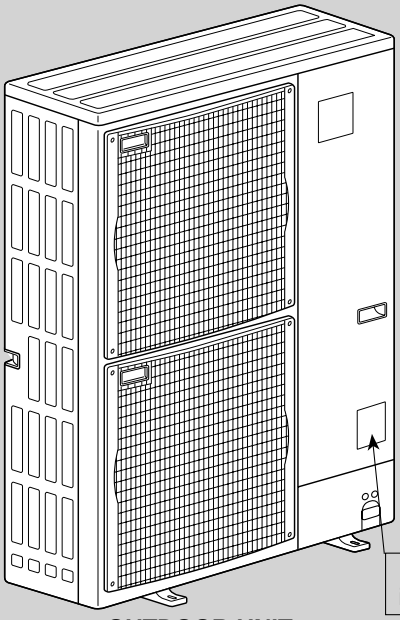

OUTDOOR UNIT

NOTE :
- This service manual describes technical data of outdoor unit.
  As for indoor units, refer to its service manual.
- RoHS compliant products have <G> mark on the spec name plate.

CONTENTS

1. TECHNICAL CHANGES 2
2. SAFETY PRECAUTION 5
3. OVERVIEW OF UNITS 8
4. SPECIFICATIONS 10
5. DATA 12
6. OUTLINES AND DIMENSIONS 18
7. WIRING DIAGRAM 20
8. NECESSARY CONDITIONS FOR SYSTEM CONSTRUCTION 24
9. TROUBLESHOOTING 34
10. ELECTRICAL WIRING 81
11. REFRIGERANT PIPING TASKS 84
12. DISASSEMBLY PROCEDURE 88
13. PARTS LIST 93
14. RoHS PARTS LIST 96
15. OPTIONAL PARTS 99

CITY MULTI

1 TECHNICAL CHANGES

PUMY-P48NHMU$_1$ ⟶ PUMY-P48NHMU$_2$
PUMY-P48NHMU$_1$-BS ⟶ PUMY-P48NHMU$_2$-BS

· Compressor (MC) and oil have been changed.
ANB33FDCMT (Ester oil: MEL56) ⟶ ANB33FDHMT(Ether oil: FV50S)
· Electrical parts have been changed.
Multi controller board (MULTI. ⟶ C.B.) Noise filter circuit board (N.F.)
Active filter module (ACTM) Relay (52C) , Resister (RS) (including N.F.)

PUMY-P48NHMU ⟶ PUMY-P48NHMU$_1$
PUMY-P48NHMU-BS ⟶ PUMY-P48NHMU$_1$-BS

• Primary heating ON/OFF control has been added.

1-1. PRIMARY HEATING ON/OFF CONTROL SET-UP

(1) Primary heating operation controls another heat source that depends on the main system's operations, which means the interlock operation shown in "c)" will be possible.

a) Service ref. PUMY-P48NHMU(-BS) does not have this function.
b) Indoor unit must be R410A UL model for this function to operate.
Note: Following Indoor models DO NOT HAVE this feature available:

PMFY-P06NBMU	PMFY-P12NBMU	PKFY-P06NAMU
PMFY-P08NBMU	PMFY-P15NBMU	PKFY-P08NAMU

c) Different Indoor unit applications that can be applied:

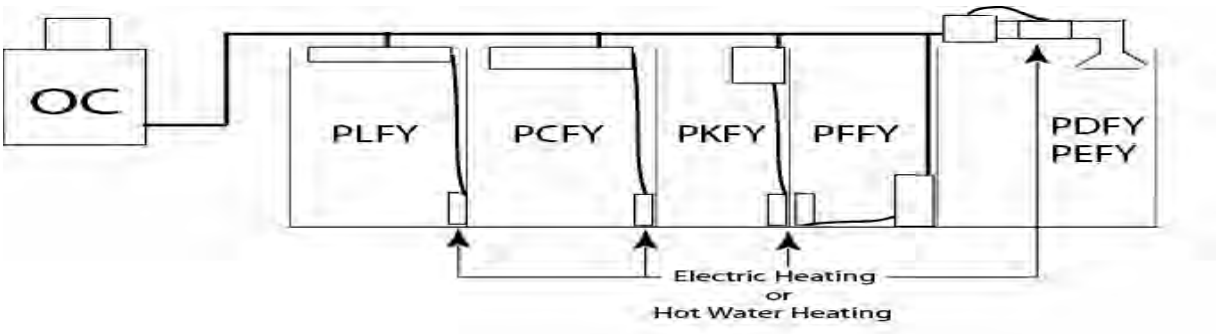

(2) Outdoor unit DIPSW4-4 for Primary Heating Control:
Set DIPSW4-4 when power is turned off at unit.
OFF: Disable Primary Heating Function (Initial setting)
ON : Enable Primary Heating Function

(3) Determine required Indoor Fans Speed during defrost mode:
a) With no Primary heating output the Indoor fan normally goes off to prevent cold drafts during the defrost cycles.
b) With Primary heating control the auxiliary heat will be on during defrost mode, thus cold drafts will not be present. (Ducted units only)
c) For models PEFY and PDFY (Ducted) recommended to use "Black" (20K) connector.
d) For models PLFY, PCFY, PKFY and PFFY (Ductless) recommended "None", no connector required.
e) To set the fan airflow rate to be used during defrost operation, insert the resistance that is packed within the optional adaptor cable kit (PAC-YU24HT-F) into the CN22 sensor input.
You can choose at what speed the indoor fan operates during defrost cycles bases on chart below.

Fan airflow rate setting During defrost operation	OFF	ON				Wiring
CN22 input resistance (Ω)	0	20k	27k	39k	62K	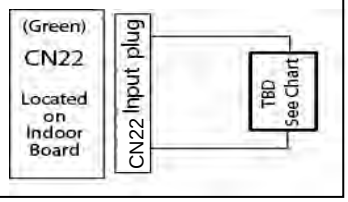
CN22 input (cable color)	None	Black	Blue	White	Red	
FAN SPEED SETTING	Stopped	Setting on remote controller	Very Low	Low	High	

Note: The setting will be disabled "when Heater contact signal is OFF".

(4) Determine Fan Airflow setting during Indoor Thermo OFF conditions:

a) These settings are done within Indoor DIPSW1-7 and DIPSW1-8, see chart below for options.

b) Recommended SW1-7 OFF and SW1-8 ON will determine airflow based on "Setting on the remote controller".

Auxiliary Heating Signal		Fan speed setting	Fan speed setting
Thermo Condition		OFF	ON
SW1-7	SW1-8		
OFF	OFF	Very low	Setting on remote controller
ON	OFF	Low	
OFF	ON	Setting on remote controller	
ON	ON	Stopped	

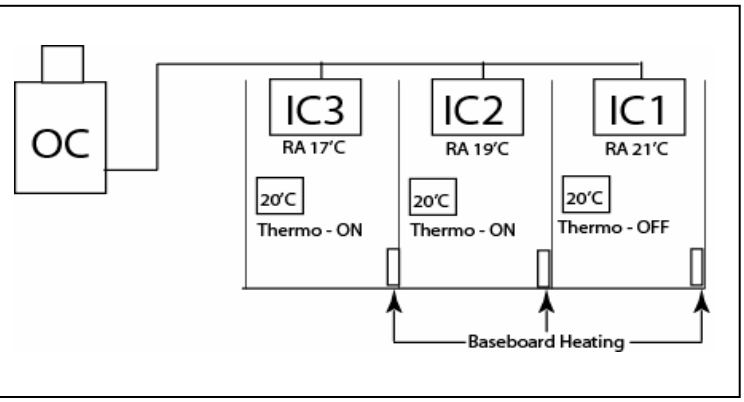

(5) Setting Outdoor unit and Auxiliary heat switch over temperatures.

When the DIPSW 4-4 is set to "ON", the outdoor unit and the contact output operates as shown below.

a) Outdoor default setting and operations are shown below:

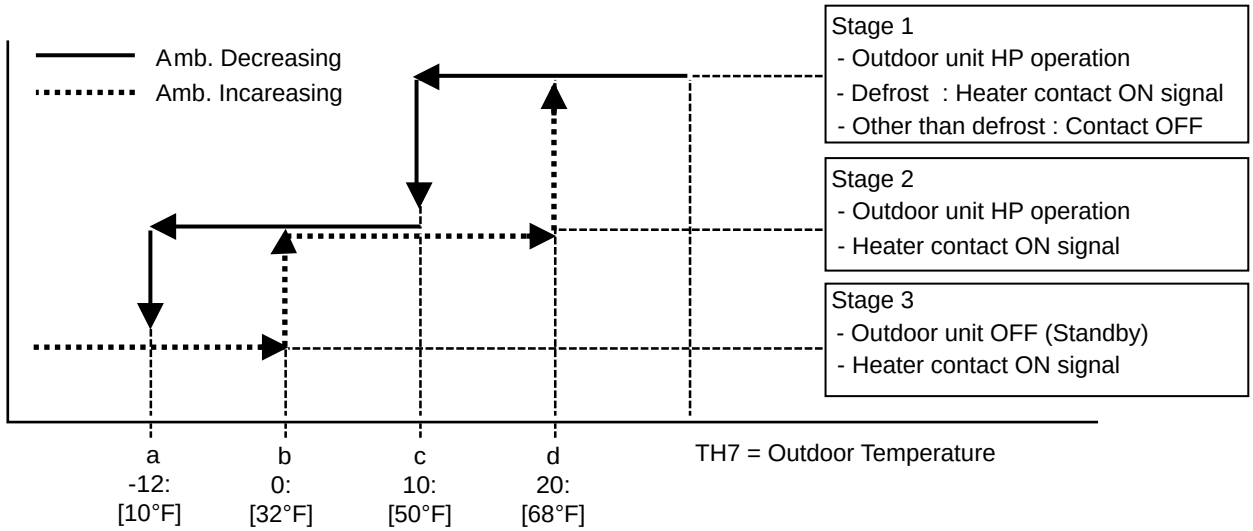

When the set temperature ranges overlap, the previously set pattern (1,2 or 3) has a priority.
The stage 1 has the highest priority, 2 the second and then 3.

b) Based on above chart listed the sequence of operation on "On Ambient Decrease"

Stage 1 :(TH7 = > 10 :) : the Outdoor unit runs in HP mode.
Stage 2 :(TH7 = 10: to -12:) : the Outdoor unit runs in HP mode with Auxiliary heating.
Stage 3 :(TH7 = < -12:) : Auxiliary heating only (Outdoor unit is OFF).

c) Based on above chart listed the sequence of operation on " On Ambient Increase"

Stage 3 :(TH7 = < 0 :) : Auxiliary heating only (Outdoor unit is OFF).
Stage 2 :(TH7 = > 0: to 20:) : Auxiliary heating with Outdoor unit in HP mode.
Stage 1 :(TH7 = > 20:) : Outdoor unit in HP mode only.

(6) Locally procured wiring

A basic connection method is shown.

(i.e. interlocked operation with the electric heater with the fan speed setting on high

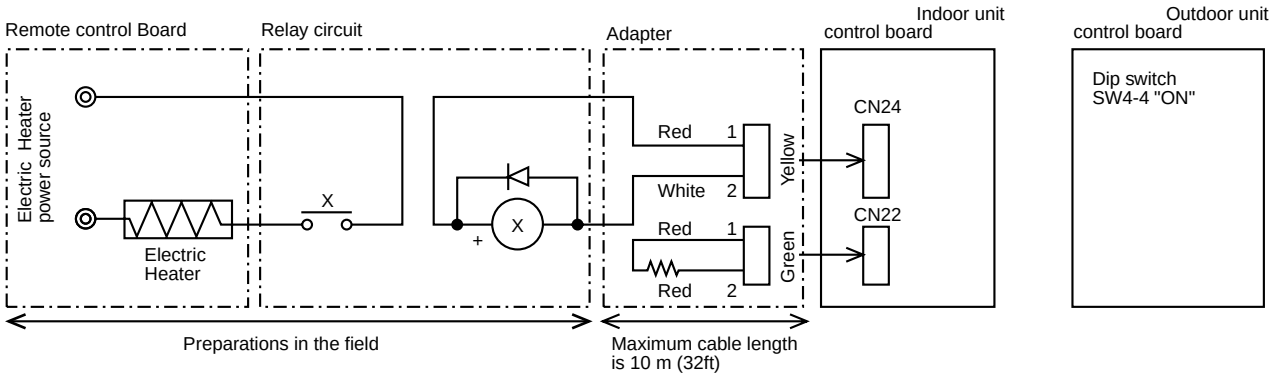

For relay X use the specifications given below Operation coil

Rated voltage : 12VDC

Power consumption :0.9W or less

*Use the diode that is recommended by the relay manufacturer at both ends of the relay coil.

The length of the electrical wiring for the PAC-YU24HT is 2 meters (6-1/2 ft)

To extend this length, use sheathed 2-core cable.

Control cable type : CVV, CVS, CPEV or equivalent.

Cable size : 0.5 mm^2 ~ 1.25 mm^2 (AWG22 to AWG16)

Don`t extend the cable more than 10 meters (32ft).

Recommended circuit

Wiring digram

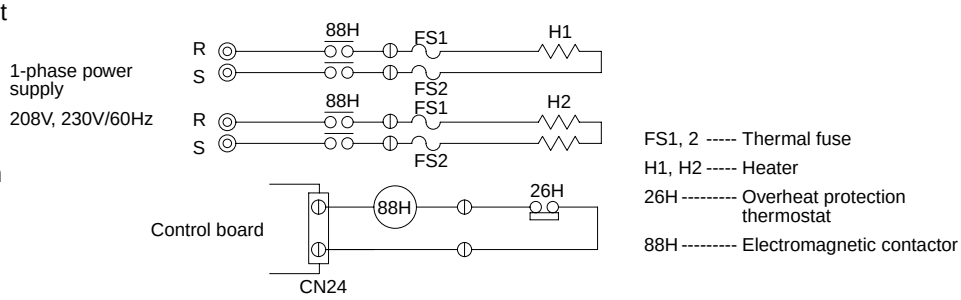

2 SAFETY PRECAUTION

2-1. CAUTIONS RELATED TO NEW REFRIGERANT

Cautions for units utilizing refrigerant R410A

Use new refrigerant pipes.

Avoid using thin pipes.

Make sure that the inside and outside of refrigerant piping is clean and it has no contamination such as sulfur hazardous for use, oxides, dirt, shaving particles, etc.
In addition, use pipes with specified thickness.

Contamination inside refrigerant piping can cause deterioration of refrigerant oil etc.

Store the piping to be used during installation indoors and keep both ends of the piping sealed until just before brazing. (Leave elbow joints, etc. in their packaging.)

If dirt, dust or moisture enters into refrigerant cycle, that can cause deterioration of refrigerant oil or malfunction of compressor.

Use ester oil, ether oil or alkylbenzene oil (small amount) as the refrigerant oil applied to flares and flange connections.

If large amount of mineral oil enters, that can cause deterioration of refrigerant oil etc.

Charge refrigerant from liquid phase of gas cylinder.

If the refrigerant is charged from gas phase, composition change may occur in refrigerant and the efficiency will be lowered.

Do not use refrigerant other than R410A.

If other refrigerant (R22 etc.) is used, chlorine in refrigerant can cause deterioration of refrigerant oil etc.

Use a vacuum pump with a reverse flow check valve.

Vacuum pump oil may flow back into refrigerant cycle and that can cause deterioration of refrigerant oil etc.

Use the following tools specifically designed for use with R410A refrigerant.

The following tools are necessary to use R410A refrigerant.

Tools for R410A	
Gauge manifold	Flare tool
Charge hose	Size adjustment gauge
Gas leak detector	Vacuum pump adaptor
Torque wrench	Electronic refrigerant charging scale

Keep the tools with care.

If dirt, dust or moisture enters into refrigerant cycle, that can cause deterioration of refrigerant oil or malfunction of compressor.

Do not use a charging cylinder.

If a charging cylinder is used, the composition of refrigerant will change and the efficiency will be lowered.

Ventilate the room if refrigerant leaks during operation. If refrigerant comes into contact with a flame, poisonous gases will be released.

[1] Cautions for service

(1) Perform service after recovering the refrigerant left in unit completely.
(2) Do not release refrigerant in the air.
(3) After completing service, charge the cycle with specified amount of refrigerant.
(4) When performing service, install a filter drier simultaneously.
Be sure to use a filter drier for new refrigerant.

[2] Additional refrigerant charge

When charging directly from cylinder

· Check that cylinder for R410A on the market is syphon type.
· Charging should be performed with the cylinder of syphon stood vertically. (Refrigerant is charged from liquid phase.)

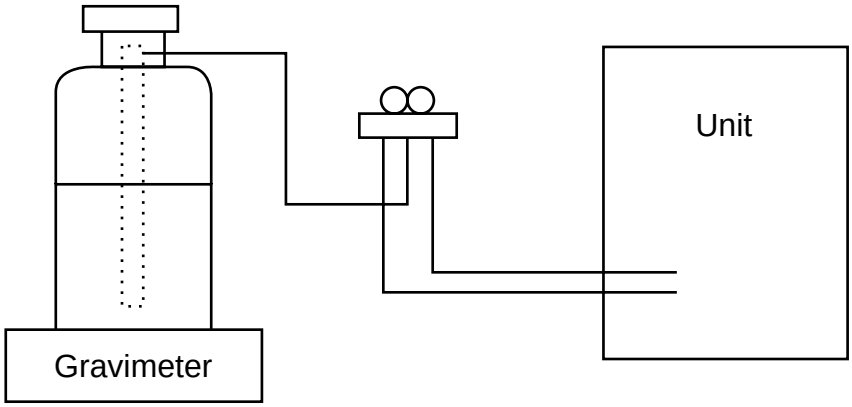

[3] Service tools

Use the below service tools as exclusive tools for R410A refrigerant.

No.	Tool name	Specifications
①	Gauge manifold	·Only for R410A
		·Use the existing fitting specifications.
		·Use high-tension side pressure of 5.3MPa·G or over.
②	Charge hose	·Only for R410A
		·Use pressure performance of 5.09MPa·G or over.
③	Electronic scale	——
④	Gas leak detector	·Use the detector for R134a, R407C or R410A.
⑤	Adaptor for reverse flow check	·Attach on vacuum pump.
⑥	Refrigerant charge base	——
⑦	Refrigerant cylinder	·Only for R410A ·Top of cylinder (Pink) ·Cylinder with syphon
⑧	Refrigerant recovery equipment	——

2-2. PRECAUTIONS FOR SALT PROOF TYPE "-BS" MODEL

Although "-BS" model has been designed to be resistant to salt damage, observe the following precautions to maintain the performance of the unit.

1. Avoid installing the unit in a location where it will be exposed directly to seawater or sea breeze.
2. If the cover panel may become covered with salt, be sure to install the unit in a location where the salt will be washed away by rainwater. (If a sunshade is installed, rainwater may not clean the panel.)
3. To ensure that water does not collect in the base of the outdoor unit, make sure that the base is level, not at angle. Water collecting in the base of the outdoor unit could cause rust.
4. If the unit is installed in a coastal area, clean the unit with water regularly to remove any salt build-up.
5. If the unit is damaged during installation or maintenance, be sure to repair it.
6. Be sure to check the condition of the unit regularly.
7. Be sure to install the unit in a location with good drainage.

2-3. Cautions for refrigerant piping work

New refrigerant R410A is adopted for replacement inverter series. Although the refrigerant piping work for R410A is same as for R22, exclusive tools are necessary so as not to mix with different kind of refrigerant. Furthermore as the working pressure of R410A is 1.6 time higher than that of R22, their sizes of flared sections and flare nuts are different.

①Thickness of pipes

Because the working pressure of R410A is higher compared to R22, be sure to use refrigerant piping with thickness shown below. (Never use pipes of 0.7mm [7/256 inch] or below.)

Diagram below: Piping diameter and thickness

Nominal dimensions[inch]	Outside diameter (mm)	Thickness (mm) [inch]	
		R410A	R22
1/4	6.35	0.8 [1/32]	0.8 [1/32]
3/8	9.52	0.8 [1/32]	0.8 [1/32]
1/2	12.70	0.8 [1/32]	0.8 [1/32]
5/8	15.88	1.0 [5/128]	1.0 [5/128]
3/4	19.05	—	1.0 [5/128]

②Dimensions of flare cutting and flare nut

The component molecules in HFC refrigerant are smaller compared to conventional refrigerants. In addition to that, R410A is a refrigerant, which has higher risk of leakage because its working pressure is higher than that of other refrigerants. Therefore, to enhance airtightness and intensity, flare cutting dimension of copper pipe for R410A have been specified separately from the dimensions for other refrigerants as shown below. The dimension B of flare nut for R410A also have partly been changed to increase intensity as shown below. Set copper pipe correctly referring to copper pipe flaring dimensions for R410A below. For 1/2 and 5/8 inch, the dimension B changes.
Use torque wrench corresponding to each dimension.

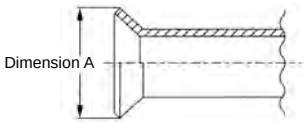

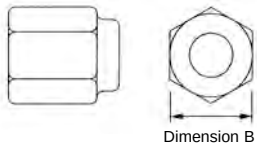

Flare cutting dimensions (mm) [inch]

Nominal dimensions[inch]	Outside diameter	Dimension A ($^{+0}_{-0.4}$)	
		R410A	R22
1/4	6.35	9.1 [11/32-23/64]	9.0
3/8	9.52	13.2 [1/2-33/64]	13.0
1/2	12.70	16.6 [41/64-21/32]	16.2
5/8	15.88	19.7 [49/64-25/32]	19.4
3/4	19.05	—	23.3

Flare nut dimensions (mm) [inch]

Nominal dimensions[inch]	Outside diameter[inch]	Dimension B	
		R410A	R22
1/4	6.35	17.0 [43/64]	17.0
3/8	9.52	22.0 [7/8]	22.0
1/2	12.70	26.0 [1-3/64]	24.0
5/8	15.88	29.0 [1-9/64]	27.0
3/4	19.05	—	36.0

③Tools for R410A (The following table shows whether conventional tools can be used or not.)

Tools and materials	Use	R410A tools	Can R22 tools be used?	Can R407C tools be used?
Gauge manifold	Air purge, refrigerant charge and operation check	Tool exclusive for R410A	×	×
Charge hose		Tool exclusive for R410A	×	×
Gas leak detector	Gas leak check	Tool for HFC refrigerant	×	○
Refrigerant recovery equipment	Refrigerant recovery	Tool exclusive for R410A	×	×
Refrigerant cylinder	Refrigerant charge	Tool exclusive for R410A	×	×
Applied oil	Apply to flared section	Ester oil, ether oil and alkylbenzene oil (minimum amount)	×	Ester oil, ether oil: ○ Alkylbenzene oil: minimum amount
Safety charger	Prevent compressor malfunction when charging refrigerant by spraying liquid refrigerant	Tool exclusive for R410A	×	×
Charge valve	Prevent gas from blowing out when detaching charge hose	Tool exclusive for R410A	×	×
Vacuum pump	Vacuum drying and air purge	Tools for other refrigerants can be used if equipped with adopter for reverse flow check	△ (Usable if equipped with adopter for reverse flow)	△ (Usable if equipped with adopter for reverse flow)
Flare tool	Flaring work of piping	Tools for other refrigerants can be used by adjusting flaring dimension	△ (Usable by adjusting flaring dimension)	△ (Usable by adjusting flaring dimension)
Bender	Bend the pipes	Tools for other refrigerants can be used	○	○
Pipe cutter	Cut the pipes	Tools for other refrigerants can be used	○	○
Welder and nitrogen gas cylinder	Weld the pipes	Tools for other refrigerants can be used	○	○
Refrigerant charging scale	Refrigerant charge	Tools for other refrigerants can be used	○	○
Vacuum gauge or thermistor vacuum gauge and vacuum valve	Check the degree of vacuum. (Vacuum valve prevents back flow of oil and refrigerant to thermistor vacuum gauge)	Tools for other refrigerants can be used	○	○
Charging cylinder	Refrigerant charge	Tool exclusive for R410A	×	—

× : Prepare a new tool. (Use the new tool as the tool exclusive for R410A.)
△ : Tools for other refrigerants can be used under certain conditions.
○ : Tools for other refrigerants can be used.

3 OVERVIEW OF UNITS

3-1. UNIT CONSTRUCTION

Outdoor unit		P36	P48
Indoor unit that can be connected	**Capacity**	Type 06 ~ Type 36	Type 06 ~ Type 54
	Number of units	1~ 6 unit	1~ 8 unit
	Total system wide capacity	50% ~130% of outdoor unit capacity	

↓

	CMY-Y62-G-E	CMY-Y64-G-E	CMY-Y68-G-E
Branching pipe components	Branch header (2 branches)	Branch header (4 branches)	Branch header (8 branches)

↓

Model / Capacity	Ceiling Casette				Ceiling Conceald			Ceiling mounted built-in	Wall Mounted			Ceiling Supended	Floor Standing		Ceiling Concealed (Fresh Air)*1
	4-way flow		2-way flow	1-way flow									Exposed	Cocealed	
	PLFY-P		PLFY-P	PMFY-P	PEFY-P			PDFY-P	PKFY-P			PCFY-P	PFFY-P		PEFY-P
	NCMU-E	NBMU-E	NLMU-E	NBMU-E	NMLU-E	NMHU-E	NMSU-E	NMU-E	NAMU-E	NGMU-E	NFMU-E	NGMU-E	NEMU-E	NRMU-E	NMHU-E-F
06	—	—	○	○	○	—	○	○	○	—	—	—	○	○	—
08	○	—	○	○	○	—	○	○	○	—	—	—	○	○	—
12	○	○	○	○	○	—	○	○	—	○	—	—	○	○	—
15	○	○	○	○	—	○	○	○	—	○	—	○	○	○	—
18	—	○	○	—	—	○	○	○	—	—	○	—	○	○	—
24	—	○	—	—	—	○	○	○	—	—	○	○	○	○	—
27	—	—	—	—	—	○	—	○	—	—	—	—	—	—	—
30	—	○	—	—	—	○	—	○	—	—	○	○	—	—	○
36	—	○	—	—	—	○	—	○	—	—	—	○	—	—	—
48	—	—	—	—	—	○	—	○	—	—	—	—	—	—	—
54	—	—	—	—	—	—	—	—	—	—	—	—	—	—	○

Decorative panel

↓

Remote controller	Name	M-NET remote controller	MA remote controller
	Model number	PAR-F27MEA-US	PAR-21MAA
	Functions	• A handy remote controller for use in conjunction with the Melans centralized management system. • Addresses must be set.	• Address setting is not necessary.

*1. It is possible only by 1:1 system.
(1 indoor unit of Fresh Air type is connected with 1 outdoor unit.)
Operating temperature range (outdoor temperature) for fresh air type indoor units differ from other indoor units.
Refer to 3-2(2).

3-2. UNIT SPECIFICATIONS

(1) Method for identifying MULTI-S model

■ **Indoor unit < When using Model 30 >**

■ **Outdoor unit <When using model 48 >**

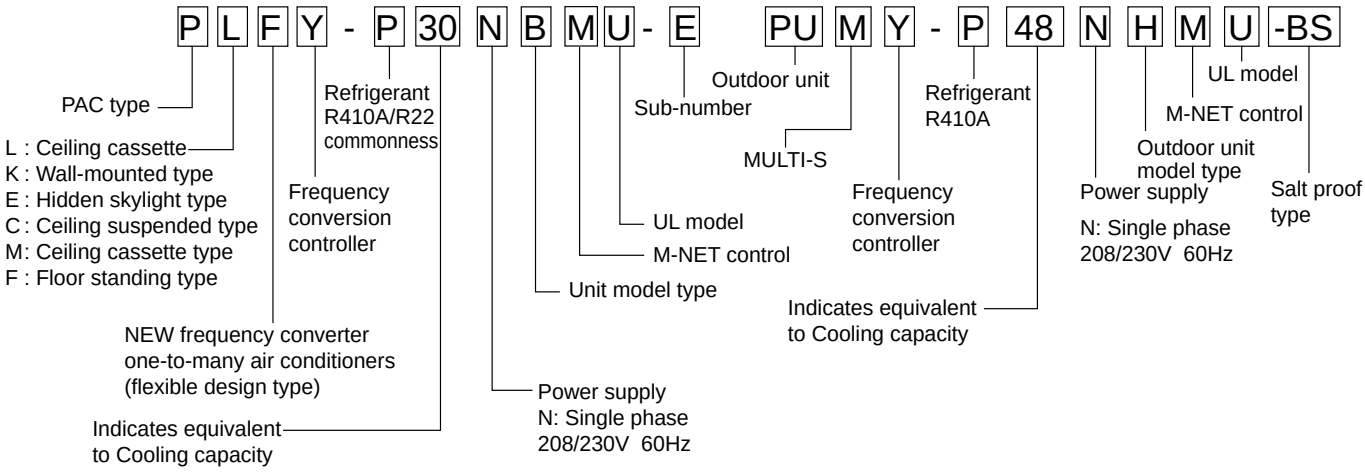

(2) Operating temperature range

	Cooling	Heating
Indoor-side intake air temperature	W.B. 15~24°C [59~75°F]	D.B. 15~27°C [59~81°F]
Outdoor-side intake air temperature	D.B. -5~46°C [23~115°F]*1	W.B. -18~15°C [0~60°F]

Notes D.B. : Dry Bulb Temperature
W.B. : Wet Bulb Temperature
*1. 10~46°C DB[50~115°FDB] : In case of connecting PKFY-P06/P08 type indoor unit.

■ In case of connecting fresh air type indoor unit

	Capacity of Fresh air type indoor	Cooling	Heating
Indoor-side and Outdoor-side intake air temperature	P30	D.B.21~43℃ [70~109°F] *2 W.B.15.5~35℃ [60~95°F]	D.B.-10~20℃ [14~68°F] *3
	P54	D.B.21~43℃ [70~109°F] *2 W.B.15.5~35℃ [60~95°F]	D.B.-5~20℃ [23~68°F] *3

*2.Thermo-off(FAN-mode) automatically starts if the outdoor temp. is lower than 21℃ D.B.[70°FD.B.].
*3.Thermo-off(FAN-mode) automatically starts if the outdoor temp. is higher than 20℃ D.B.[68°FD.B.].

(3) Guaranteed voltage

198~253V, 60Hz

4 SPECIFICATIONS

Item			Service Ref.	PUMY-P36NHMU(-BS)
Cooling Capacity			Btu/h	36,000
Heating Capacity			Btu/h	40,000
Input (Cool) *3			kW	3.22
Input Current (Cool) *3			A	14.23/15.74
Power factor (Cool) *3			%	98.4
Input (Heat) *3			kW	2.93
Input Current (Heat) *3			A	12.88/14.24
Power factor (Heat) *3			%	98.9
EER (Cool) *3			Btu/h/W	11.18
COP (Heat) *3			W/W	4.00
Connectable indoor units (Max.)				6
Max. Connectable Capacity			Btu/h	46,800(130%)
Power Supply				Single phase , 60Hz , 208/230V
Breaker Size				30A
Max. fuse size				40A
Min.Circuit.Ampacity				26A
Sound level (Cool/Heat)			dB	49 / 51
External finish				Munsell 3Y 7.8/1.1
Refrigerant control				Linear Expansion Valve
Compressor				Hermetic
	Model			ANB33FDHMT
	Motor output		kW	2.2
	Starting method			Inverter
Crankcase heater			W	—
Heat exchanger				Plate fin coil (Anti corrosion fin treatment)
Fan	Fan(drive) × No.			Propeller fan × 2
	Fan motor output		kW	0.086 + 0.086
	Airflow		m^3/min [CFM]	100 [3,530]
Dimensions (HxWxD)		W	mm [in.]	950 [37-13/32]
		D	mm [in.]	330+30 [13+1-3/16)
		H	mm [in.]	1,350 [53-5/32]
Weight			kg [lbs]	130 [287]
Refrigerant				R410A
	Charge		kg [lbs]	8.5 [18.7]
	Oil (Model)		L [oz]	2.3 [73] (FV50S)
Protection devices	High pressure protection			HP switch
	Compressor protection			Discharge thermo, Over current detection
	Fan motor protection			Overheating/Voltage protection
Total Piping length (Max.)			m [ft]	120 [394]
Farthest			m [ft]	80 [262]
Max Height difference			m [ft]	30 [100]*1
Chargeless length			m [ft]	50 [165]
Piping diameter		Liquid	ϕmm[inch]	9.52 [3/8]
		Gas	ϕmm[inch]	15.88 [5/8]
Guranteed operation range			(cool)	-5~ 46℃ DB [23~115°F DB]*2
			(heat)	-18~ 15℃ WB [0~60°F WB]

Rating conditions

Cooling Indoor : D.B. 26.7°C / W.B. 19.4°C [D.B. 80°F / W.B. 67°F]
Outdoor : D.B. 35°C [D.B. 95°F]

Heating Indoor : D.B. 21.1°C [D.B. 70°F]
Outdoor : D.B. 8.3°C / W.B. 6.1°C [D.B. 47°F / W.B. 43°F]

Note.*1. 20m[70ft]:In case of installing outdoor unit lower than indoor unit.
*2. 10~46°C[50~115°F]DB:In case of connecting PKFY-P06/P08 type indoor unit.
*3. Electrical data is for only outdoor unit.
(In case of connecting 2 indoor units of PLFY-P18BM type)

Btu/h=kW × 3,412 CFM=m^3/min × 35.31 lbs=kg/ 0.4536

*Above specification data is subject to rounding variation.

Item			Service Ref.	PUMY-P48NHMU/NHMU1/NHMU2(-BS)
Cooling Capacity			Btu/h	48,000
Heating Capacity			Btu/h	54,000
Input (Cool) *3			kW	4.97
Input Current (Cool) *3			A	24.0/21.7
Power factor (Cool) *3			%	99.5
Input (Heat) *3			kW	4.88
Input Current (Heat) *3			A	23.6/21.3
Power factor (Heat) *3			%	99.5
EER (Cool) *3			Btu/h/W	9.66
COP (Heat) *3			W/W	3.24
Connectable indoor units (Max.)				8
Max. Connectable Capacity			Btu/h	62,400 (130%)
Power Supply				Single phase , 60Hz , 208/230V
Breaker Size				30A
Max. fuse size				40A
Min.Circuit.Ampacity				26A
Sound level (Cool/Heat)			dB	50 / 52
External finish				Munsell 3Y 7.8/1.1
Refrigerant control				Linear Expansion Valve
Compressor				Hermetic
	Model			ANB33FDCMT(NHMU(1)), ANB33FDHMT(NHMU2)
	Motor output		kW	2.4
	Starting method			Inverter
Crankcase heater			W	—
Heat exchanger				Plate fin coil (Anti corrosion fin treatment)
Fan	Fan(drive) × No.			Propeller fan × 2
	Fan motor output		kW	0.086 + 0.086
	Airflow		m^3/min [CFM]	100 [3,530]
Dimensions (HxWxD)		W	mm [in.]	950 [37-13/32]
		D	mm [in.]	330+30 [13+1-3/16)
		H	mm [in.]	1,350 [53-5/32]
Weight			kg [lbs]	130 [287]
Refrigerant				R410A
	Charge		kg [lbs]	8.5 [18.7]
	Oil (Model)		L [oz]	2.3 [73] (MEL56/NHMU(1), FV50S/NHMU2)
Protection devices	High pressure protection			HP switch
	Compressor protection			Discharge thermo, Over current detection
	Fan motor protection			Overheating/Voltage protection
Total Piping length (Max.)			m [ft]	120 [394]
Farthest			m [ft]	80 [262]
Max Height difference			m [ft]	30 [100]*1
Chargeless length			m [ft]	50 [165]
Piping diameter		Liquid	ϕmm[inch]	9.52 [3/8]
		Gas	ϕmm[inch]	15.88 [5/8]
Guranteed operation range			(cool)	-5~ 46℃ DB [23~115°F DB]*2
			(heat)	-18~ 15℃ WB [0~60°F WB]

Rating conditions

Cooling Indoor : D.B. 26.7°C / W.B. 19.4°C [D.B. 80°F / W.B. 67°F]
Outdoor : D.B. 35°C [D.B. 95°F]

Heating Indoor : D.B. 21.1°C [D.B. 70°F]
Outdoor : D.B. 8.3°C / W.B. 6.1°C [D.B. 47°F / W.B. 43°F]

Note.*1. 20m[70ft] : In case of installing outdoor unit lower than indoor unit.
*2. 10~46°C[50~115°F]DB : In case of connecting PKFY-P06/P08 type indoor unit.
*3. Electrical data is for only outdoor unit.
(In case of connecting 2 indoor units of PLFY-P24BM type)

Btu/h=kW × 3,412 CFM= m^3/min × 35.31 lbs=kg/ 0.4536

*Above specification data is subject to rounding variation.

5 DATA

5-1. COOLING AND HEATING CAPACITY AND CHARACTERISTICS

5-1-1. Method for obtaining system cooling and heating capacity:

To obtain the system cooling and heating capacity and the electrical characteristics of the outdoor unit, first add up the ratings of all the indoor units connected to the outdoor unit (see table below), and then use this total to find the standard capacity with the help of the tables on 5-2.STANDARD CAPACITY DIAGRAM.

(1) Capacity of indoor unit

Model Number for indoor unit	Model 06	Model 08	Model12	Model 15	Model 18	Model 24	Model 27	Model 30	Model 36	Model 48	Model 54
Model Capacity	6	8	12	15	18	24	27	30	36	48	54

(2) Sample calculation

①System assembled from indoor and outdoor unit (in this example the total capacity of the indoor units is greater than that of the outdoor unit)

- Outdoor unit PUMY-P48NHMU
- Indoor unit PKFY-P08NAMU-E × 2 , PLFY-P18NLMU-E × 2

②According to the conditions in ①, the total capacity of the indoor unit will be: 8 × 2 + 18 × 2 = 52

③The following figures are obtained from the 52 total capacity row of the standard capacity table (5-2.):

Capacity (Btu/h)		Outdoor unit power consumption (kW)		Outdoor unit current (A)/230V	
Cooling	Heating	Cooling	Heating	Cooling	Heating
Ⓐ 48,900	Ⓑ 54,500	5.01	4.71	21.9	20.6

5-1-2. Method for obtaining the heating and cooling capacity of an indoor unit:

(1) The capacity of each indoor unit (Btu/h) = the capacity Ⓐ(or Ⓑ) × $\frac{\text{model capacity}}{\text{total model capacity of all indoor units}}$

(2) Sample calculation (using the system described above in 5-1-1. (2)):

During cooling:

- The total model capacity of the indoor unit is:

8000 × 2 + 18000 × 2=52000Btu/h

Therefore, the capacity of PKFY-P08NAMU-E and PLFY-P18NLMU-E will be calculated as follows by using the formula in 5-1-2. (1):

Model 08= 48,900 × $\frac{8000}{52000}$ = 7,520 Btu/h

Model 18= 48,900 × $\frac{18000}{52000}$ = 16,930 Btu/h

During heating:

- The total model capacity of indoor unit is:

9000 × 2 + 20000 × 2=58000 Btu/h

Therefore, the capacity of PKFY-P08NAMU-E and PLFY-P18NLMU-E will be calculated as follows by using the formula in 5-1-2. (1):

Model 08=54,500 × $\frac{9000}{58000}$ = 8,460 Btu/h

Model 18= 54,500 × $\frac{20000}{58000}$ = 18,790 Btu/h

5-2. STANDARD CAPACITY DIAGRAM

* Before calculating the sum of total capacity of indoor units, please convert the value following the formula on 5-1-1.

5-2-1. PUMY-P36NHMU(-BS)

Total capacity of Indoor units*	Capacity(Btu/h)		Power Consumption(kW)		Current(A)/230V		Current(A)/208V	
	Cooling	Heating	Cooling	Heating	Cooling	Heating	Cooling	Heating
18	18,000	20,200	1.38	1.45	6.1	6.4	6.8	7.1
19	19,000	21,300	1.45	1.52	6.4	6.7	7.1	7.4
20	20,000	22,400	1.52	1.60	6.7	7.0	7.4	7.8
21	21,000	23,500	1.60	1.67	7.1	7.4	7.8	8.1
22	22,000	24,700	1.68	1.75	7.4	7.7	8.2	8.5
23	23,000	25,800	1.76	1.83	7.8	8.0	8.6	8.9
24	24,000	26,900	1.85	1.91	8.2	8.4	9.0	9.3
25	25,000	28,000	1.94	1.98	8.6	8.7	9.5	9.6
26	26,000	29,200	2.04	2.06	9.0	9.1	9.9	10.0
27	27,000	30,300	2.14	2.15	9.4	9.4	10.4	10.4
28	28,000	31,400	2.24	2.23	9.9	9.8	10.9	10.8
29	29,000	32,500	2.35	2.31	10.4	10.2	11.5	11.2
30	30,000	33,700	2.46	2.40	10.9	10.5	12.0	11.7
31	31,000	34,800	2.58	2.48	11.4	10.9	12.6	12.1
32	32,000	35,900	2.70	2.57	11.9	11.3	13.2	12.5
33	33,000	37,000	2.82	2.66	12.5	11.7	13.8	12.9
34	34,000	38,200	2.95	2.75	13.0	12.1	14.4	13.4
35	35,000	39,300	3.08	2.84	13.6	12.5	15.1	13.8
36	36,000	40,000	3.22	2.93	14.2	12.9	15.7	14.2
37	36,200	40,200	3.23	2.92	14.3	12.9	15.8	14.2
38	36,400	40,400	3.25	2.89	14.3	12.7	15.9	14.1
39	36,600	40,700	3.26	2.86	14.4	12.6	15.9	13.9
40	36,900	40,900	3.27	2.84	14.5	12.5	16.0	13.8
41	37,100	41,100	3.28	2.81	14.5	12.3	16.0	13.6
42	37,300	41,300	3.30	2.78	14.6	12.2	16.1	13.5
43	37,500	41,600	3.31	2.75	14.6	12.1	16.2	13.4
44	37,700	41,800	3.32	2.72	14.7	11.9	16.2	13.2
45	37,900	42,000	3.34	2.69	14.7	11.8	16.3	13.1
46	38,100	42,200	3.35	2.66	14.8	11.7	16.4	12.9

Note) In some combination patterns, numerical value of the heating data may differ slightly (CAPACITY : about several hundred Btu/h)

5-2-2. PUMY-P48NHMU/NHMU$_1$/NHMU$_2$(-BS)

Total capacity of Indoor units*	Capacity(Btu/h)		Power Consumption(kW)		Current(A)/230V		Current(A)/208V	
	Cooling	Heating	Cooling	Heating	Cooling	Heating	Cooling	Heating
24	24,000	26,900	2.11	2.32	9.2	10.2	10.2	11.2
25	25,000	28,000	2.20	2.41	9.6	10.5	10.6	11.6
26	26,000	29,200	2.29	2.50	10.0	10.9	11.1	12.1
27	27,000	30,300	2.38	2.59	10.4	11.3	11.5	12.5
28	28,000	31,400	2.48	2.68	10.8	11.7	12.0	13.0
29	29,000	32,500	2.58	2.78	11.3	12.1	12.4	13.4
30	30,000	33,700	2.68	2.87	11.7	12.6	12.9	13.9
31	31,000	34,800	2.78	2.97	12.2	13.0	13.4	14.4
32	32,000	35,900	2.89	3.07	12.6	13.4	14.0	14.8
33	33,000	37,000	3.00	3.17	13.1	13.9	14.5	15.3
34	34,000	38,200	3.11	3.28	13.6	14.3	15.0	15.8
35	35,000	39,300	3.23	3.38	14.1	14.8	15.6	16.3
36	36,000	40,400	3.35	3.49	14.6	15.2	16.2	16.9
37	37,000	41,500	3.47	3.60	15.2	15.7	16.8	17.4
38	38,000	42,700	3.60	3.71	15.7	16.2	17.4	17.9
39	39,000	43,800	3.72	3.82	16.3	16.7	18.0	18.5
40	40,000	44,900	3.85	3.93	16.8	17.2	18.6	19.0
41	41,000	46,000	3.99	4.05	17.4	17.7	19.3	19.6
42	42,000	47,200	4.12	4.17	18.0	18.2	19.9	20.1
43	43,000	48,300	4.26	4.28	18.6	18.7	20.6	20.7
44	44,000	49,400	4.41	4.41	19.3	19.3	21.3	21.3
45	45,000	50,500	4.55	4.53	19.9	19.8	22.0	21.9
46	46,000	51,700	4.70	4.65	20.5	20.3	22.7	22.5
47	47,000	52,800	4.85	4.78	21.2	20.9	23.4	23.1
48	48,000	54,000	4.97	4.88	21.7	21.3	24.0	23.6
49	48,300	54,200	4.98	4.83	21.8	21.1	24.1	23.3
50	48,500	54,300	4.99	4.79	21.8	20.9	24.1	23.2
51	48,700	54,400	5.00	4.75	21.8	20.8	24.1	23.0
52	48,900	54,500	5.01	4.71	21.9	20.6	24.2	22.8
53	49,100	54,600	5.01	4.67	21.9	20.4	24.2	22.6
54	49,300	54,800	5.02	4.63	21.9	20.2	24.3	22.4
55	49,600	54,900	5.03	4.59	22.0	20.1	24.3	22.2
56	49,800	55,000	5.04	4.55	22.0	19.9	24.3	22.0
57	50,000	55,100	5.04	4.51	22.0	19.7	24.4	21.8
58	50,200	55,200	5.05	4.47	22.1	19.5	24.4	21.6
59	50,400	55,300	5.06	4.43	22.1	19.4	24.4	21.4
60	50,600	55,500	5.07	4.39	22.1	19.2	24.5	21.2
61	50,800	55,600	5.07	4.35	22.2	19.0	24.5	21.0
62	51,100	55,700	5.08	4.31	22.2	18.8	24.6	20.8

Note) In some combination patterns, numerical value of the heating data may differ slightly (CAPACITY : about several hundred Btu/h)

5-3. CORRECTING COOLING AND HEATING CAPACITY

5-3-1. Correcting Changes in Air Conditions

(1)The performance curve charts (Figure 1, 2) show the ratio by the temperature condition change when the rated capacity (total capacity) and the rated input are presumed 1, under standard length (7.6m [25ft]) and standerd temperature condition.

• Standard conditions:

Rated cooling capacity	Indoor D.B. 26.7°C / W.B. 19.4°C [D.B.80°F / W.B.67°F] Outdoor D.B. 35°C [D.B.95°F]
Rated heating capacity	Indoor D.B. 21.1°C [D.B.70°F] Outdoor D.B. 8.3°C / W.B. 6.1°C [D.B.47°F / W.B.43°F]

• Use the rated input and rated power values given in the characteristics table for each indoor unit.

• The input is the single value of the outdoor unit; the input of each indoor unit must be added to obtain the total input.

(2)The capacity of each indoor unit may be obtained by multiplying the total capacity obtained in (1) by the ratio between the individual capacity at the rated time and the total capacity at the rated time.

$$\text{Individual capacity under stated conditions} = \text{total capacity under the stated conditions} \times \frac{\text{individual capacity at the rated time}}{\text{total capacity at the rated time}}$$

(3)Capacity correction factor curve

Figure 1. Cooling performance curve

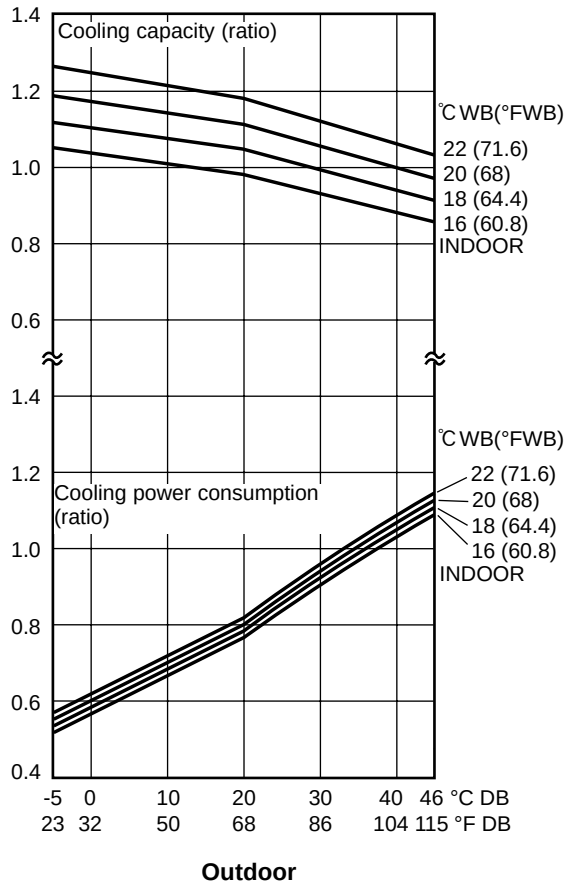

Figure 2. Heating performance curve

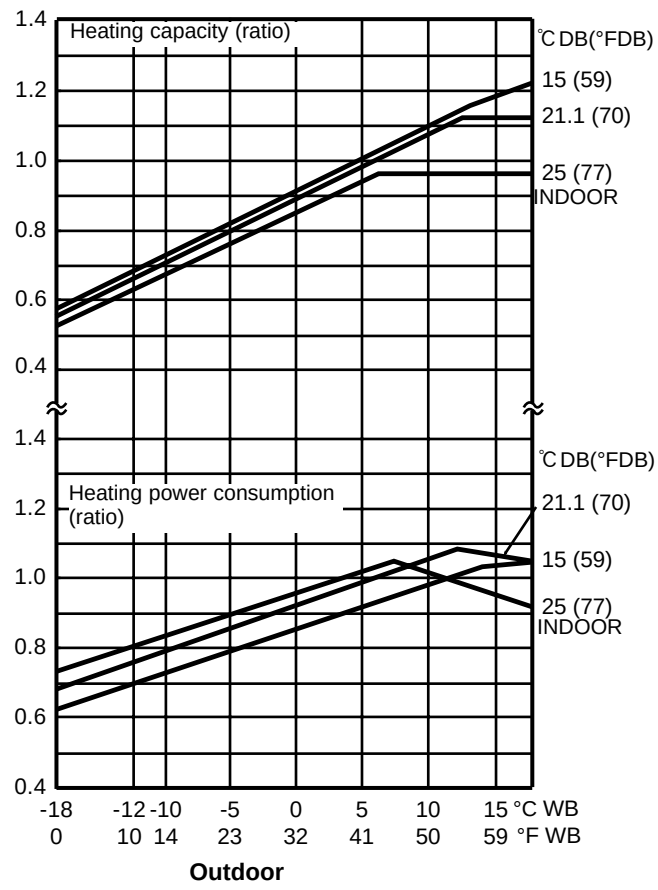

5-3-2. Correcting Capacity for Changes in the Length of Refrigerant Piping

- During cooling, to obtain the ratio (and the equivalent piping length) of the outdoor units rated capacity and the total in-use indoor capacity, first find the capacity ratio corresponding to the standard piping length from Figure 3 at first, and then multiply by the cooling capacity from Figure 1 to obtain the actual capacity.
- During heating, to find the equivalent piping length, first find the capacity ratio corresponding to standard piping length from Figure 3, and then multiply by the heating capacity from Figure 2 to obtain the actual capacity.

(1) Capacity CORRECTION CURVE (Figure 3)

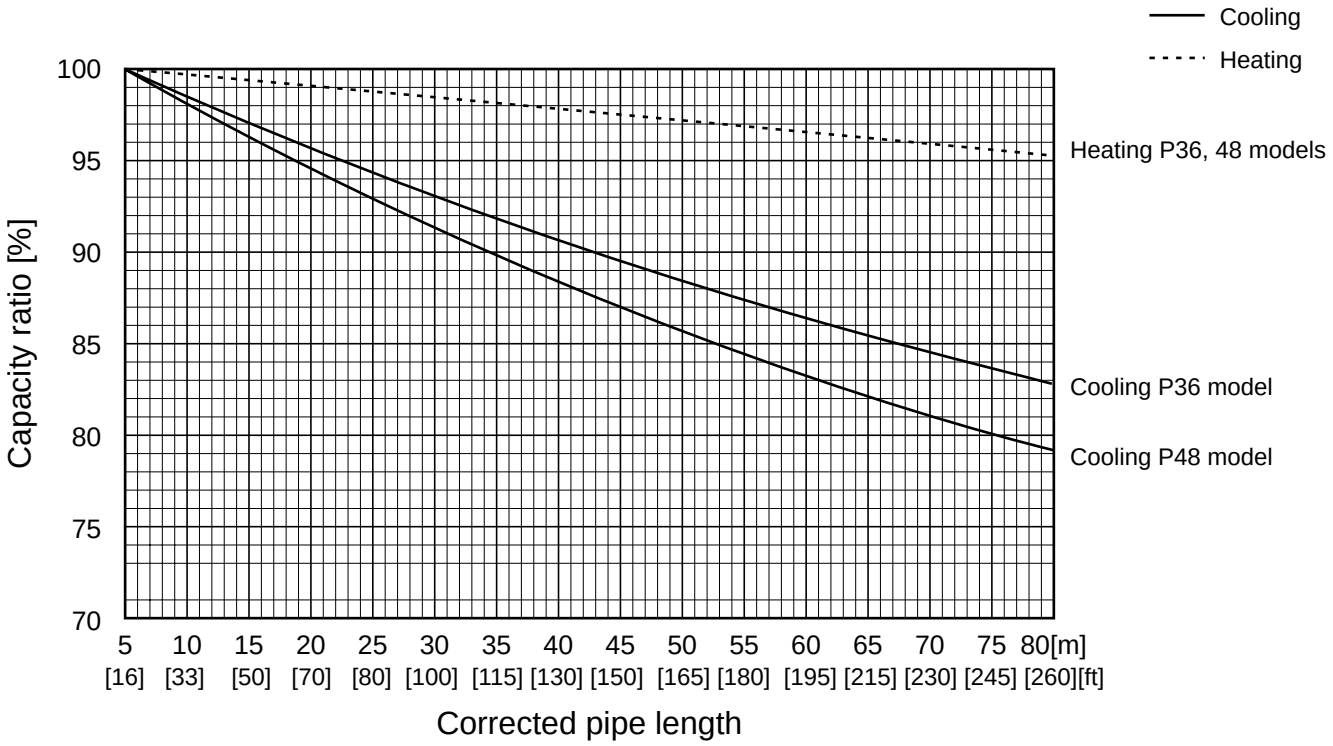

(2) Method for Obtaining the Equivalent Piping Length

Equivalent length for type P48 = (length of piping to farthest indoor unit) + (0.3 × number of bends in the piping) (m)
Length of piping to farthest indoor unit: 80m [262ft]

5-3-3. Correction of Heating Capacity for Frost and Defrosting

If heating capacity has been reduced due to frost formation or defrosting, multiply the capacity by the appropriate correction factor from the following table to obtain the actual heating capacity.

Correction factor diagram

Outdoor Intake temperature (W.B.°F)	43	39	36	32	28	25	21	18	14
Outdoor Intake temperature (W.B.°C)	6	4	2	0	-2	-4	-6	-8	-10
Correction factor	1.0	0.98	0.89	0.88	0.89	0.9	0.95	0.95	0.95

5-4. NOISE CRITERION CURVES

PUMY-P36NHMU(-BS)

MODE	SPL(dB)	LINE
COOLING	49	○——○
HEATING	51	●——●

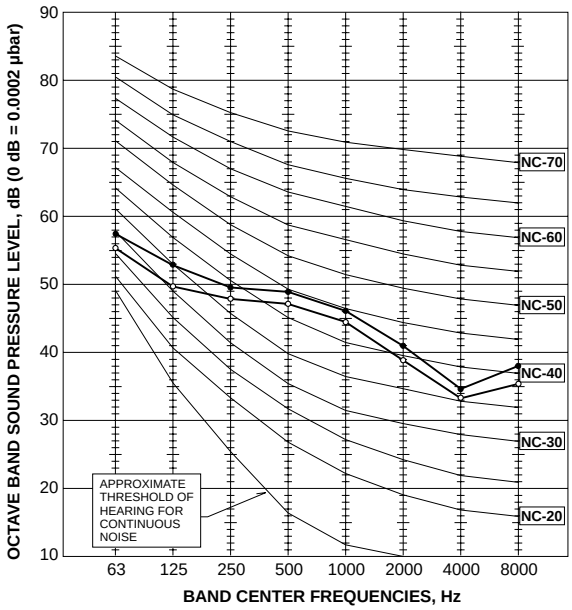

PUMY-P48NHMU(-BS)
PUMY-P48NHMU$_1$(-BS)
PUMY-P48NHMU$_2$(-BS)

MODE	SPL(dB)	LINE
COOLING	50	○——○
HEATING	52	●——●

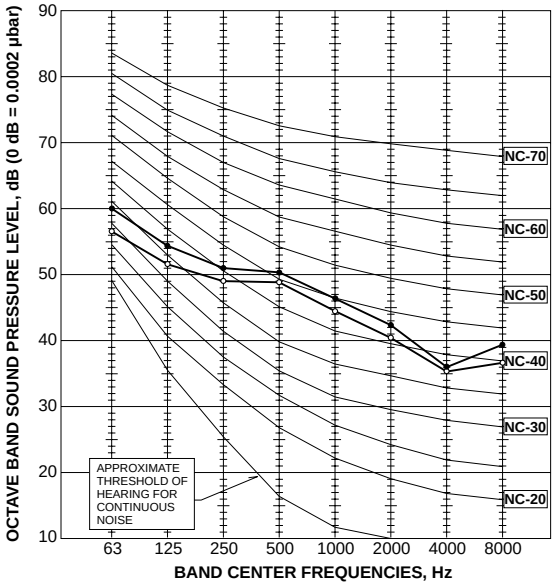

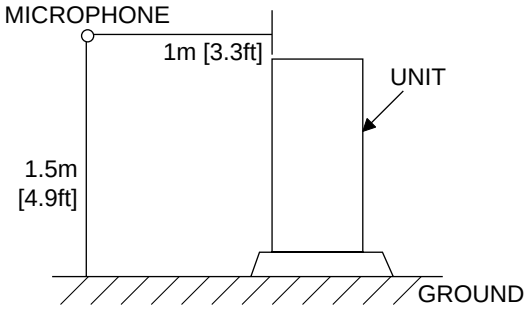

6 OUTLINES AND DIMENSIONS

PUMY-P48NHMU
PUMY-P48NHMU-BS
PUMY-P48NHMU1
PUMY-P48NHMU1-BS

Unit : mm <inch>

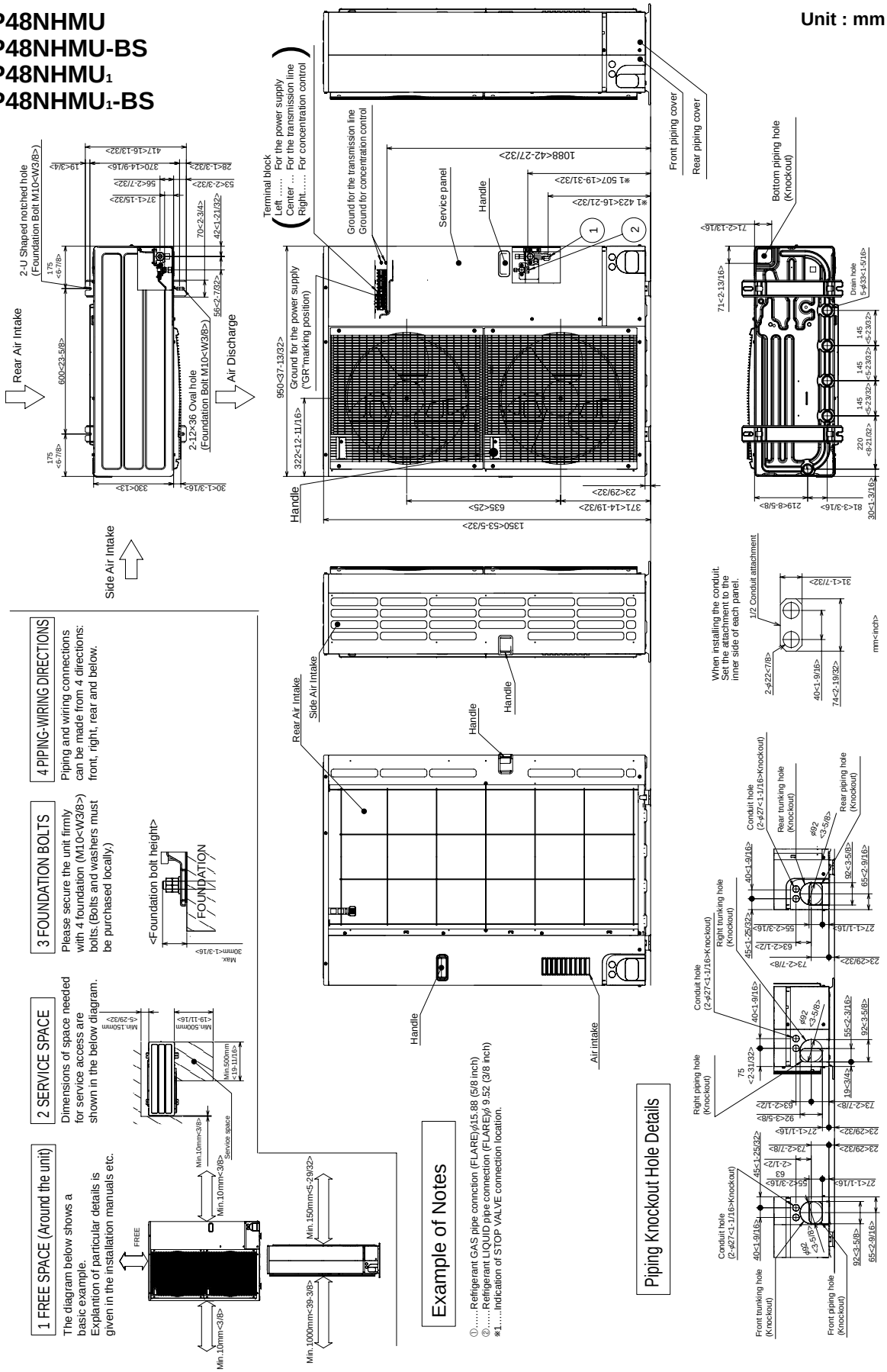

PUMY-P36NHMU
PUMY-P36NHMU-BS
PUMY-P48NHMU$_2$
PUMY-P48NHMU$_2$-BS

Unit : mm <inch>

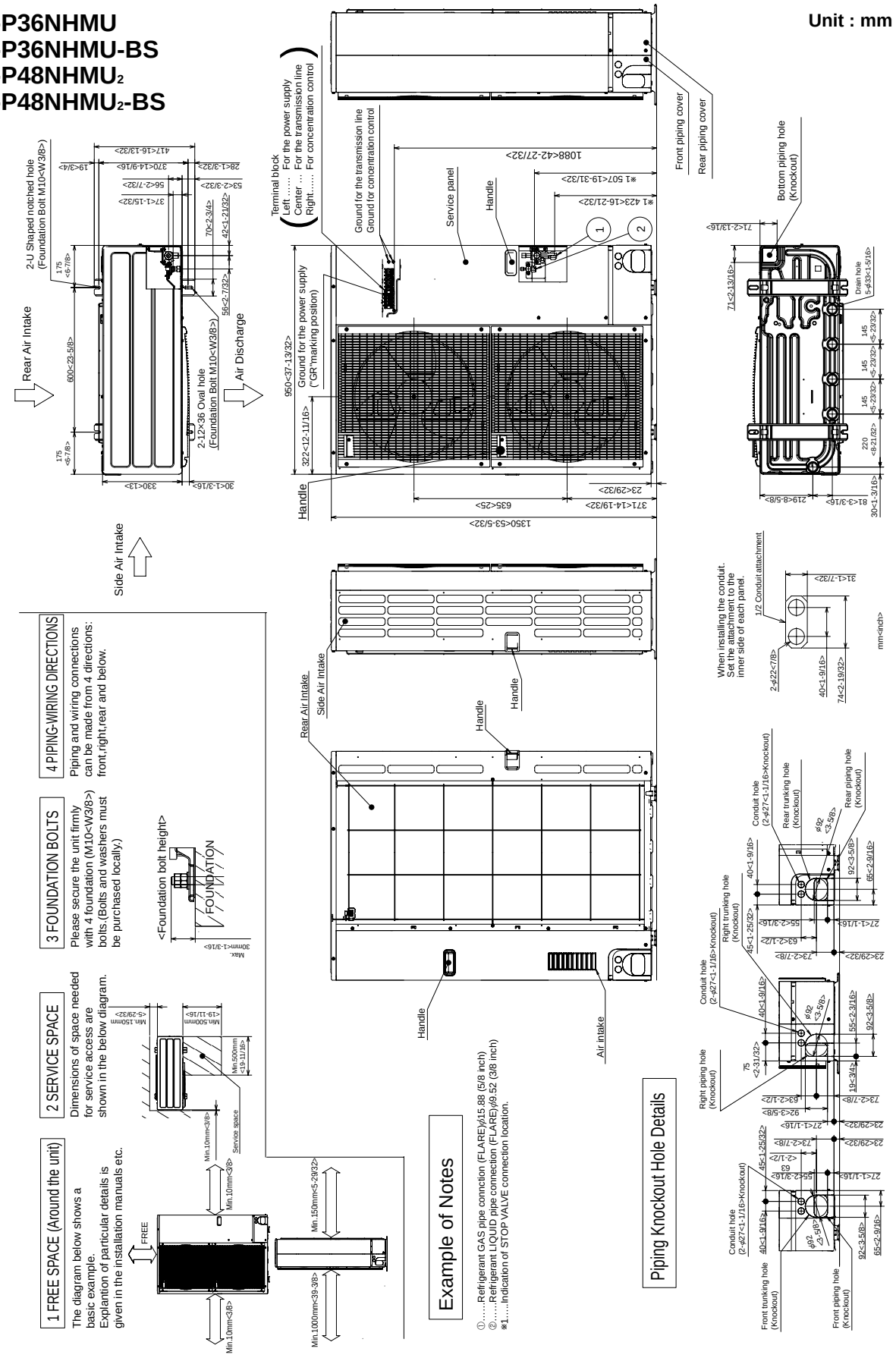

7 WIRING DIAGRAM

PUMY-P48NHMU PUMY-P48NHMU-BS PUMY-P48NHMU$_1$ PUMY-P48NHMU$_1$-BS

SYMBOL	NAME
TB1	Terminal Block <Power Supply>
TB3	Terminal Block <Transmission>
TB7	Terminal Block <Contralized Control>
MC	Motor for Compressor
MF1,MF2	Fan Motor
21S4	Solenoid Valve<Four way valve>
SV1	Solenoid Valve<Bypass valve>
TH3	Thermistor<Outdoor Pipe Temperature>
TH4	Thermistor<Discharge Temperature>
TH6	Thermistor<Low Pressure Saturated Temperature>
TH7	Thermistor<Outdoor Temperature>
TH8	Thermistor<Heatsink>
63HS	High Pressure Sensor<Discharge Pressure>
63H	High Pressure Switch
63L	Low Pressure Switch
CB	Main Smoothing Capacitor
ACTM	Active filter Module
RS	Rush Current Protect Resistor
DCL	Reactor
P.B.	Power Circuit Board
U/V/W	Connection Terminal<U/V/W-Phase>
TAB-S/T	Terminal<L/N-Phase>
TAB-P/P1/P2	Terminal<DCVoltage>
TAB-N/N1/N2	Terminal<DCVoltage>
CN2~5	Connector
CNDC	Connector
CNAF	Connector
IPM	Inverter
LED1	Light Emitting Diodes <Inverter Control Status>

SYMBOL	NAME
MULTI.B.	Multi Controller Board
F1,F2	Fuse<6.3A>
F500	Fuse<3A>
SW1	Switch<Display Selection>
SW2	Switch<Function Selection>
SW3	Switch<Test Run>
SW4	Switch<Model Selection>
SW5	Switch<Function Selection>
SW6	Switch<Function Selection>
SW7	Switch<Function Selection>
SW8	Switch<Function Selection>
SWU1	Switch<Unit Address Selection, 1s digit>
SWU2	Switch<Unit Address Selection, 10ths digit>
TRANS	Transfomer
LED1,2	Digital Indicator<Operation Inspection Display>
LED3	LED<Power Supply to Main Microcomputer>
CNS1	Connector<Multi System>
CNS2	Connector<Centralized Cotrol>
CNAC	Connector<To Noise Filter Circuit Board>
CNDC	Connector<Power circuit board>
CN2	Connector<To Power Circuit Board>
CN4	Connector<To Power Circuit Board>
CN40	Connector<Centralized Cotrol Power Supply>
CN41	Connector<For storing Jumper Connector>
TH3	Connector<Thermistor>
TH4	Connector<Thermistor>
TH7/6	Connector<Thermistor>
63HS	Connector<High Pressure Sensor>
63H	Connector<High Pressure Switch>
63L	Connector<Low Pressure Switch>
CNF1,CNF2	Connector<Fan Motor>
21S4	Connector<Four-way Valve>
SV1	Connector<Bypass Valve>
SS	Connector<For Option>
CN3D	Connector<For Option>
CN3S	Connector<For Option>
CN3N	Connector<For Option>
CN51	Connector<For Option>
X501~505	Relay

SYMBOL	NAME
N.F.	Noise Filter Circuit Board
LI/LO	Connection Lead<L-Phase>
NI/NO	Connection Lead<N-Phase>
EI	Connection Terminal<Ground>
CNAC1/2	Connector
CN5	Connector
M-P.B.	Transmission Power Board
CN1	Connector<To Noise Filter Circuit Board>
CN2	Connector<To Multi Controller Board>

Caution for electrical work

Use copper supply wires.

Cautions when Servicing

⚠WARNING: When the main supply is turned off, the voltage [340 V] in the main capacitor will drop to 20 V in approx. 2 minutes (input voltage: 240 V). When servicing, make sure that LED1, LED2 on the outdoor circuit board goes out, and then wait for at least 1 minute.

Components other than the outdoor board may be faulty: Check and take corrective action, referring to the service manual.
Do not replace the outdoor board without checking.

NOTES:

1.Refer to the wiring diagrams of the indoor units for details on wiring of each indoor unit.

Self-diagnosis function

The indoor and outdoor units can be diagnosed automatically using the self-diagnosis switch (SW1) and LED1, LED2 (LED indication) found on the multi-controller of the outdoor unit.
LED indication : Set all contacts of SW1 to OFF.

During normal operation

The LED indicates the drive state of the controller in the outdoor unit.

Bit	1	2	3	4	5	6	7	8
Indication	Compressor operated	52C	21S4	SV1	(SV2)	–	–	Always lit

[Example]
When the compressor and SV1 are turned during cooling operation.

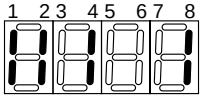

When fault requiring inspection has occurred

The LED alternately indicates the inspection code and the location of the unit in which the fault has occurred.

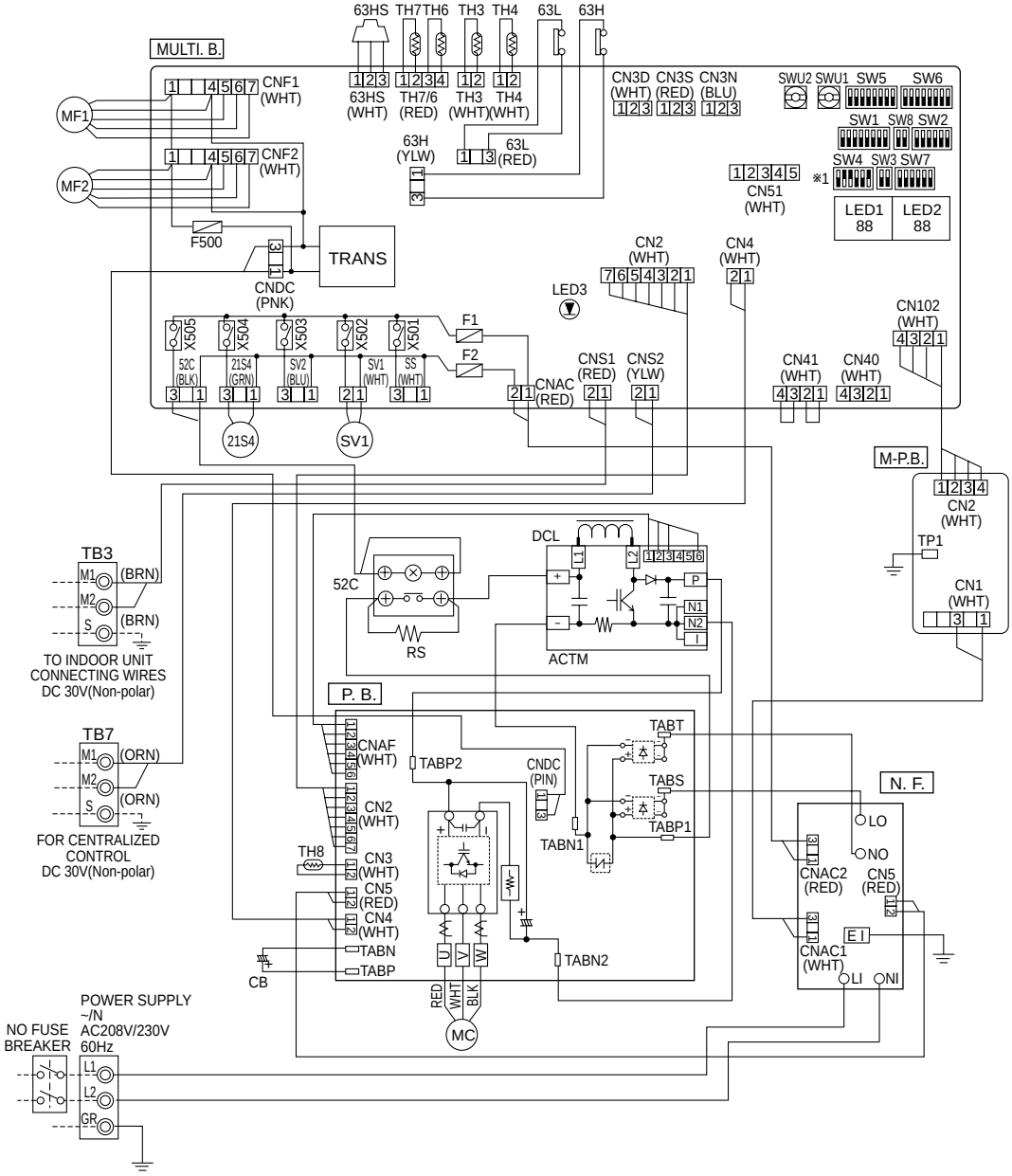

<※1 MODEL SELECT>

MODELS	SW4
PUMY-P48NHMU	ON OFF 1 2 3 4 5 6

(Note : Only PUMY-P48NHMU$_1$ and PUMY-P48NHMU$_1$-BS)

DIP SW4-4 for primary heating control : Set DIP SW4-4 when power is turned off at unit.

DIP SW4-4 OFF : Disable primary heating function (Initial setting)

DIP SW4-4 ON : Enable primary heating function

PUMY-P36NHMU PUMY-P36NHMU-BS PUMY-P48NHMU$_2$ PUMY-P48NHMU$_2$-BS

SYMBOL	NAME	SYMBOL	NAME	SYMBOL	NAME
TB1	Terminal Block <Power Supply>	P.B.	Power Circuit Board	SW6	Switch<Function Selection>
TB3	Terminal Block <Comunication Line>	TABU/V/W	Connection Terminal<U/V/W-Phase>	SW7	Switch<Function Selection>
TB7	Terminal Block <Centralized Control Line>	TABS/T	Connection Terminal<L/N-Phase>	SW8	Switch<Function Selection>
MC	Motor For Compressor	TABP1/P2/P	Connection Terminal<DC Voltage>	SWU1	Switch<Unit Address Selection, 1s digit>
MF1,MF2	Fan Motor	TABN1/N2/N	Connection Terminal<DC Voltage>	SWU2	Switch<Unit Address Selection, 10ths digit>
21S4	Solenoid Valve<Four-Way Valve>	DS2,DS3	Diode Bridge	CNLVB	Connector<To N.F. Board CN52C> (Symbol of Board is CNLVB)
63H	High Pressure Switch	IPM	Power Module		
63L	Low Pressure Switch	N.F.	Noise Filter Circuit Board	SS	Connector<Connection For Option>
63HS	High Pressure Sensor	LI/LO	Connection Terminal<L-Phase>	CN3D	Connector<Connection For Option>
SV1	Solenoid Valve<Bypass valve>	NI/NO	Connection Terminal<N-Phase>	CN3S	Connector<Connection For Option>
TH3	Thermistor<Outdoor Pipe>	EI,E2	Connection Terminal<Ground>	CN3N	Connector<Connection For Option>
TH4	Thermistor<Discharge>	52C	52C Relay	CN51	Connector<Connection For Option>
TH6	Thermistor<Low Pressure Saturated>	C.B.	Controller Circuit Board	LED1,LED2	LED<Operation Inspection Display>
TH7	Thermistor<Outdoor>	SW1	Switch<Display Selection>	LED3	LED<Power Supply to Main Microcomputer>
TH8	Thermistor<Heatsink>	SW2	Switch<Function Selection>	F1,F2	Fuse<T6,3AL250V>
DCL	Reactor	SW3	Switch<Test Run>	X501~505	Relay
ACTM	Active Filter Module	SW4	Switch<Model Selection>	M-NET P.B.	M-NET Power Circuit Board
CE	Main Smoothing Capacitor	SW5	Switch<Function Selection>	TP1	ConnectionTerminal<Ground>

Caution for electrical work

Use copper supply wires.

Cautions when Servicing

- ⚠WARNING: When the main supply is turned off, the voltage [340 V] in the main capacitor will drop to 20 V in approx. 2 minutes (input voltage: 240 V). When servicing, make sure that LED1, LED2 on the outdoor circuit board goes out, and then wait for at least 1 minute.
- Components other than the outdoor board may be faulty: Check and take corrective action, referring to the service manual. Do not replace the outdoor board without checking.

NOTES:

1.Refer to the wiring diagrams of the indoor units for details on wiring of each indoor unit.

Self-diagnosis function

The indoor and outdoor units can be diagnosed automatically using the self-diagnosis switch (SW1) and LED1, LED2 (LED indication) found on the multi-controller of the outdoor unit.

LED indication : Set all contacts of SW1 to OFF.

- During normal operation
- The LED indicates the drive state of the controller in the outdoor unit.

Bit	1	2	3	4	5	6	7	8
Indication	Compressor operated	52C	21S4	SV1	(SV2)	-	-	Always lit

[Example]
When the compressor and SV1 are turned during cooling operation.

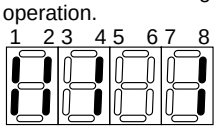

- When fault requiring inspection has occurred

The LED alternately indicates the inspection code and the location of the unit in which the fault has occurred.

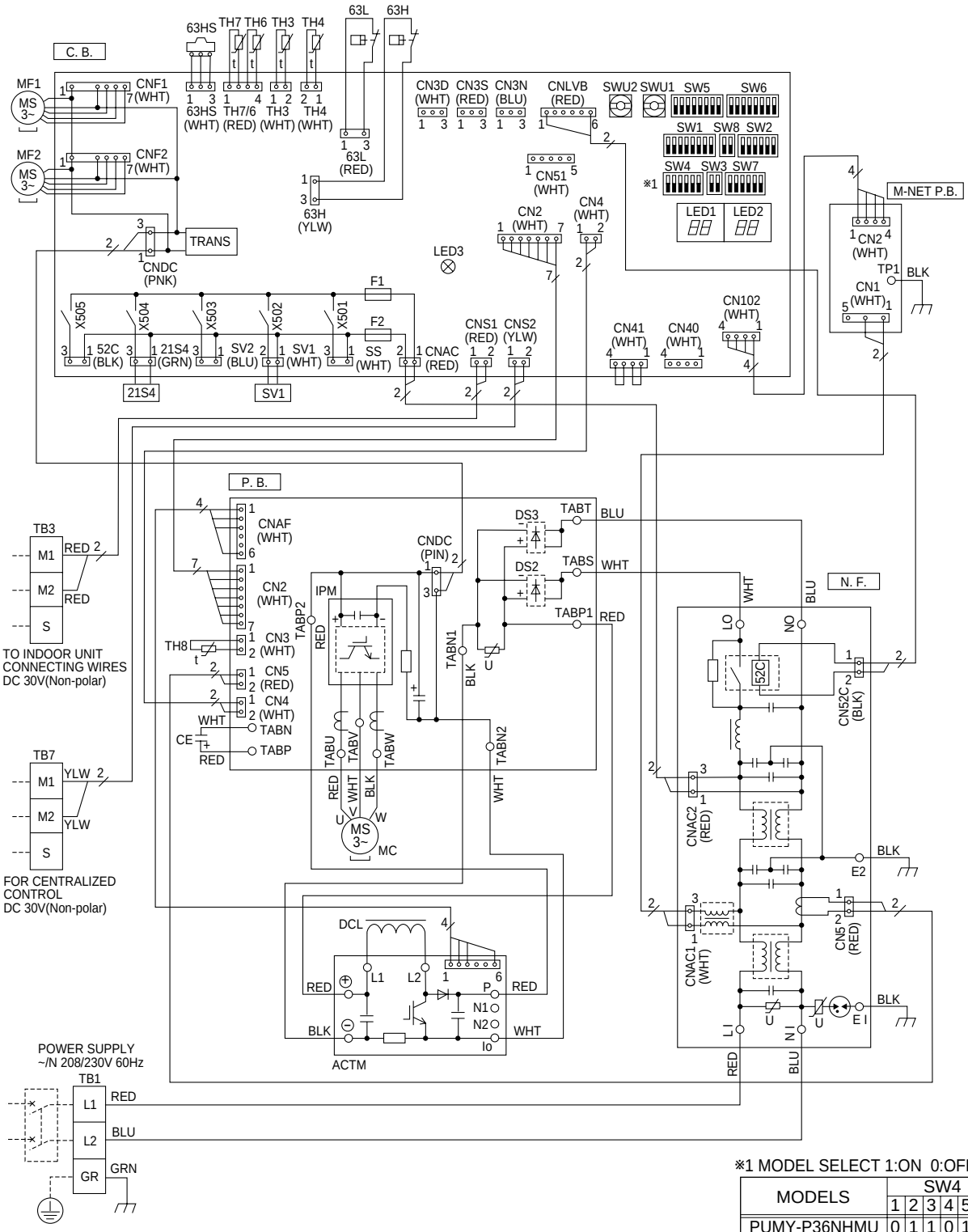

※1 MODEL SELECT 1:ON 0:OFF

MODELS	SW4					
	1	2	3	4	5	6
PUMY-P36NHMU	0	1	1	0	1	0
PUMY-P48NHMU	0	1	1	0	0	1

8 NECESSARY CONDITIONS FOR SYSTEM CONSTRUCTION

8-1. TRANSMISSION SYSTEM SETUP

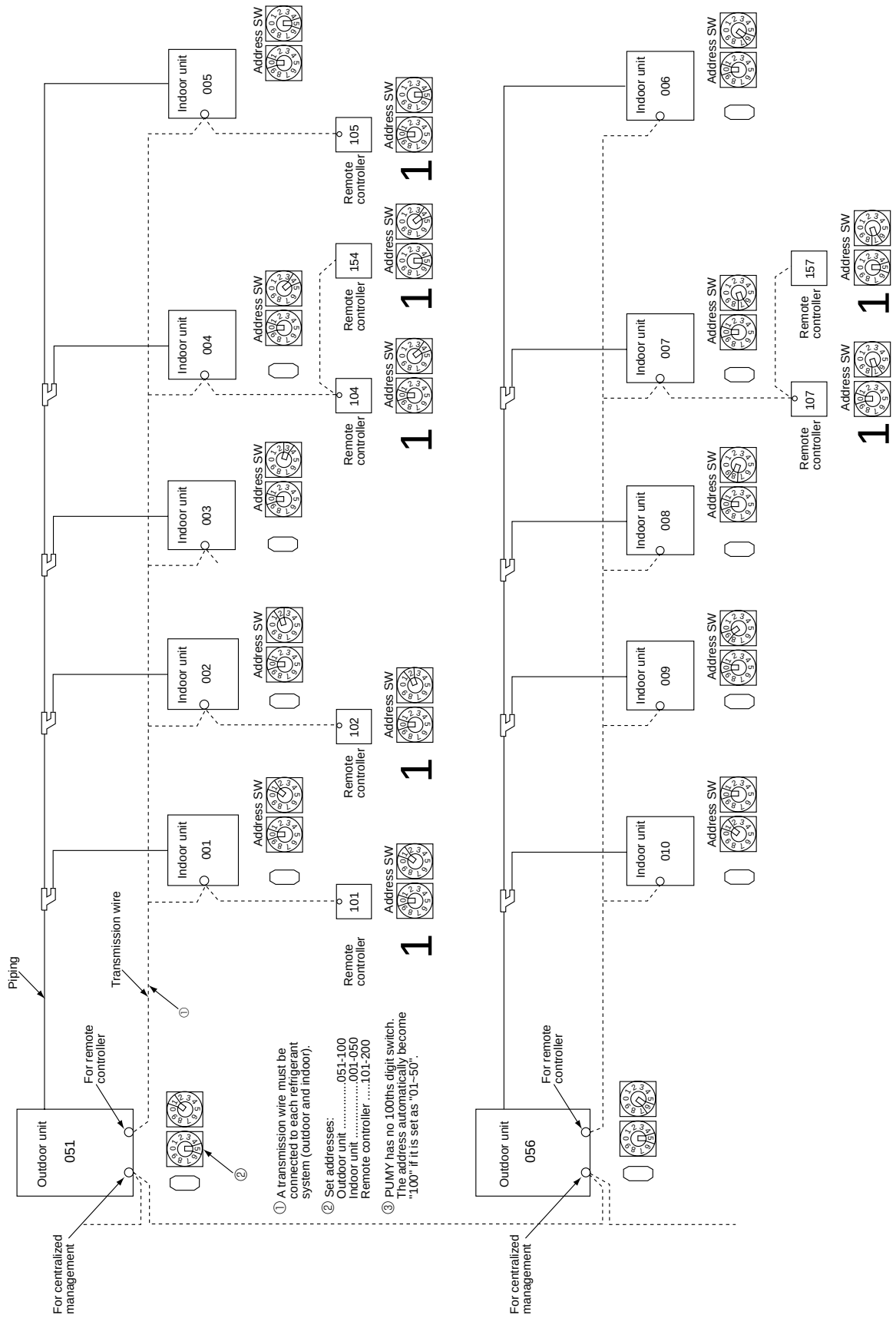

8-2. REFRIGERANT SYSTEM DIAGRAM

PUMY-P48NHMU **PUMY-P48NHMU$_1$** **PUMY-P48NHMU$_2$**
PUMY-P48NHMU-BS **PUMY-P48NHMU$_1$-BS** **PUMY-P48NHMU$_2$-BS**
PUMY-P36NHMU **PUMY-P36NHMU-BS**

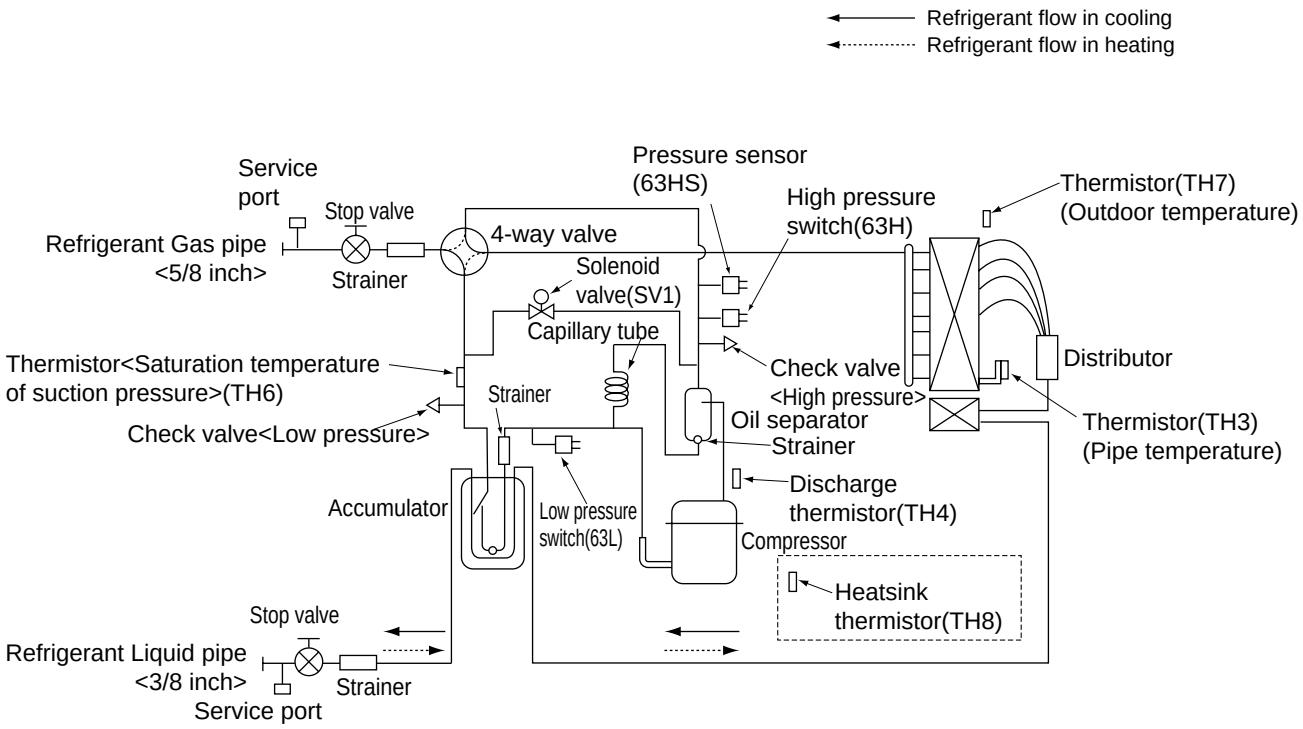

Capillary tube (for oil separator) : ϕ2.5 × ϕ0.8 × L1000(mm) [ϕ(3/32) × ϕ(1/32) × L(39-1/2)] inch

Refrigerant pipng specifications <dimensions of flared connector>

Unit:mm<inch>

Capacity \ Item		Liquid piping	Gas pipng
Indoor unit	P06, P08, P12, P15, P18	ϕ6.35<1/4>	ϕ12.7<1/2>
	P24, P30, P36, P48, P54	ϕ9.52<3/8>	ϕ15.88<5/8>
Outdoor unit	P36, P48	ϕ9.52<3/8>	ϕ15.88<5/8>

8-3. SYSTEM CONTROL

8-3-1. Example for the System

- Example for wiring control cables, wiring method and address setting, permissible lengths, and the prohibited items are listed in the standard system with detailed explanation.

  The explanation for the system in this section : Use one single outdoor unit and multiple outdoor units for M-NET remote control system.
  Use one single outdoor unit and multiple indoor units in the multiple outdoor units for the M-NET remote control system.

A. Example of a M-NET remote controller system (address setting is necessary.)

Example of wiring control cables	Wiring Method and Address Setting

1. Standard operation

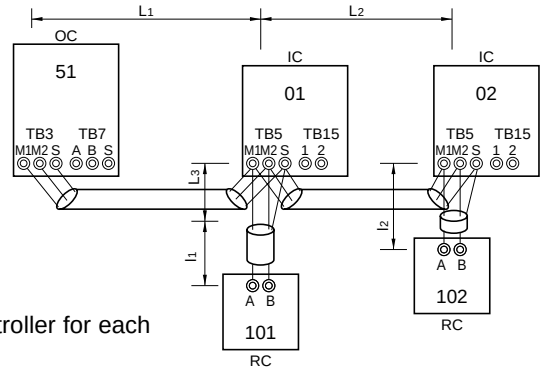

- 1 remote controller for each indoor unit.
- There is no need for setting the 100 position on the remote controller.

a. Use feed wiring to connect terminals M1 and M2 on transmission cable block (TB3) for the outdoor unit (OC) to terminals M1 and M2 on the transmission cable block (TB5) of each indoor unit (IC). Use non-polarized 2 wire.

b. Connect terminals M1 and M2 on transmission cable terminal block (TB5) for each indoor unit with the terminal block (TB6) for the remote controller (RC).

c. Set the address setting switch (on outdoor unit P.C.B) as shown below.

Unit	Range	Setting Method
Indoor unit (IC)	001 to 050	—
Outdoor unit (OC)	051 to 100	Use the smallest address of all the indoor unit plus 50.
Remote controller (RC)	101 to 150	Indoor unit address plus 100.

2. Operation using 2 remote controllers

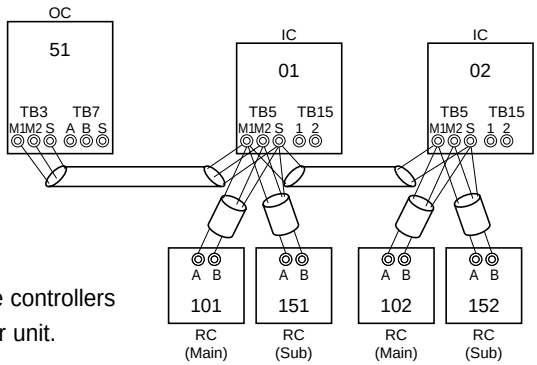

- Using 2 remote controllers for each indoor unit.

a. Same as above.

b. Same as above.

c. Set address switch (on outdoor unit P.C.B) as shown below.

Unit	Range	Setting Method
Indoor Unit (IC)	001 to 050	—
Outdoor unit (OC)	051 to 100	Use the smallest address of all the indoor units plus 50.
Main Remote Controller (RC)	101 to 150	Indoor unit address plus 100.
Sub Remote Controller (RC)	151 to 200	Indoor unit address plus 150.

3. Group operation

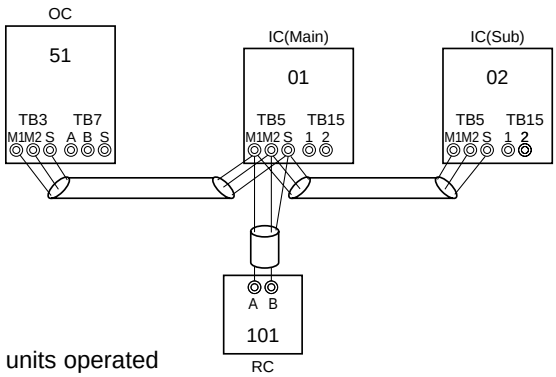

- Multiple indoor units operated together by 1 remote controller

a. Same as above.

b. Connect terminals M1 and M2 on transmission cable terminal block (TB5) of the IC main unit with the most recent address within the same indoor unit (IC) group to terminal block (TB6) on the remote controller.

c. Set the address setting switch (on outdoor unit P.C.B) as shown below.

Unit	Range	Setting Method
IC (Main)	001 to 050	Use the smallest address within the same group of indoor units.
IC (Sub)	001 to 050	Use an address, other than that of the IC (Main) in the same group of indoor units. This must be in sequence with the IC (Main).
Outdoor Unit	051 to 100	Use the smallest address of all the indoor units plus 50.
Main Remote Controller	101 to 150	Set at an IC (Main) address within the same group plus 100.
Sub Remote Controller	151 to 200	Set at an IC (Main) address within the same group plus 150.

d. Use the indoor unit (IC) within the group with the most functions as the IC (Main) unit.

Combinations of 1through 3 above are possible.

• **Name, Symbol and the Maximum Remote controller Units for Connection**

Name	Symbol	Maximum units for connection
Outdoor unit	OC	—
Indoor unit	IC	One OC unit can be connected to 1-6(P36)/1-8(P48) IC units
M-NET remote controller	RC	Maximum 2 RC for 1 indoor unit, Maximum 16 RC for 1 OC

Permissible Lengths	Prohibited items
Longest transmission cable length (1.25 mm² [AWG16]) $L_1 + L_2$, $L_2 + L_3$, $L_3 + L_1 \leqq 200$m [656ft] Remote controller cable length 1. If 0.5 to 1.25 mm² [AWG20 to AWG16] ℓ_1, $\ell_2 \leqq 10$m [33ft] 2. If the length exceeds 10 meters [33ft], the exceeding section should be 1.25 mm² [AWG16] and that section should be a value within the total extension length of the transmission cable and maximum transmission cable length. (L_3)	• M-NET remote controller(RC) and MA remote controller(MA) cannot be used together. • Do not connect anything with TB15 of indoor unit(IC). 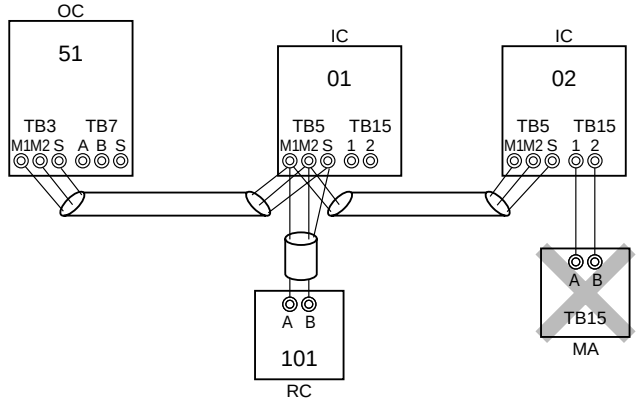
Same as above	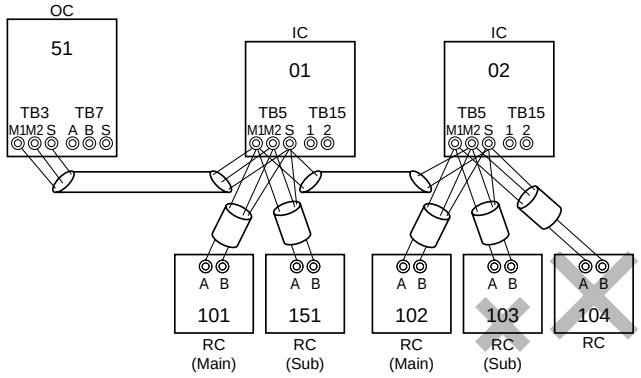 • Use the indoor unit(IC) address plus 150 as the sub remote controller address. In this case, it should be 152. • Three or more remote controller (RC) cannot be connected to 1 indoor unit.
Same as above	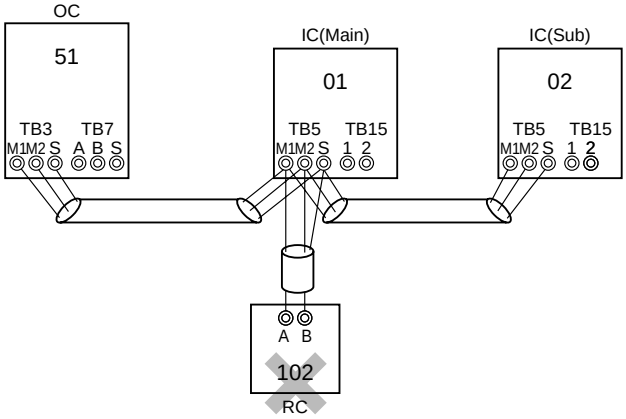 • The remote controller address is the indoor unit main address plus 100. In this case, it should be 101.

B. Example of a group operation system with 2 or more outdoor units and a M-NET remote controller.
(Shielding wires and address settings are necessary.)

Examples of Transmission Cable Wiring

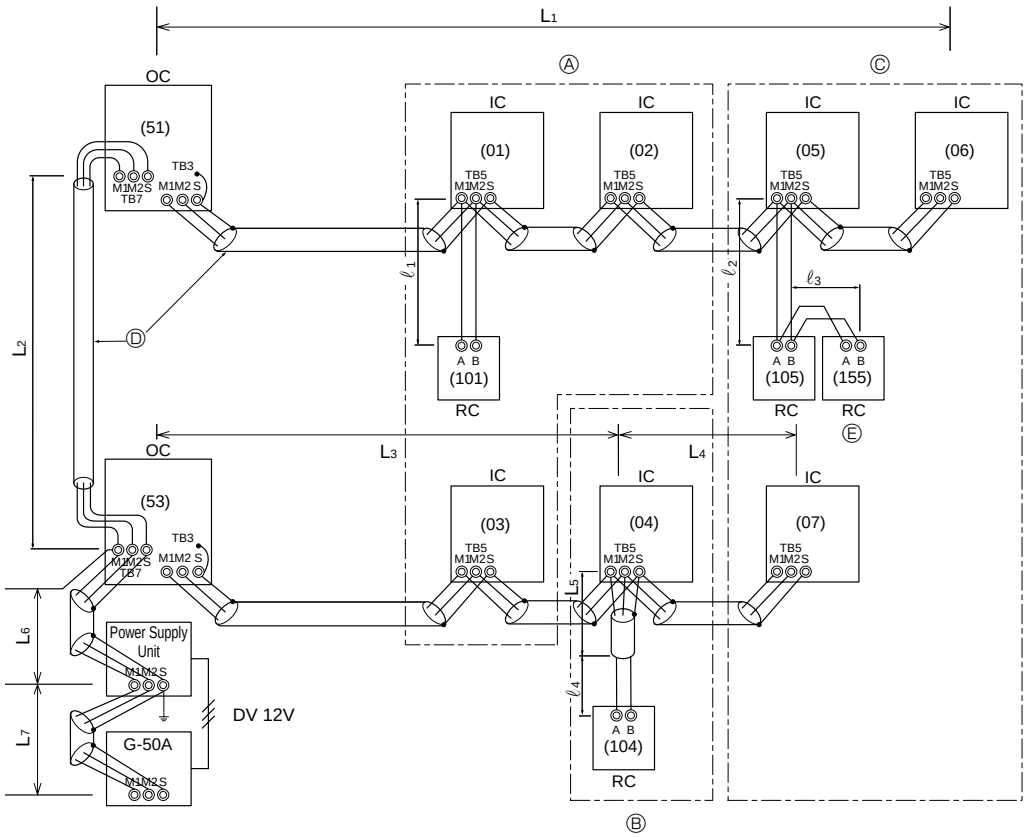

Ⓐ : Group 1
Ⓑ : Group 3
Ⓒ : Group 5
Ⓓ : Shielded Wire
Ⓔ : Sub Remote Controller
( ): Address

Wiring Method Address Settings

a. Always use shielded wire when making connections between the outdoor unit (OC) and the indoor unit (IC), as well for all OC-OC, and IC-IC wiring intervals.
b. Use feed wiring to connect terminals M1 and M2 and the ground terminal on the transmission cable terminal block (TB3) of each outdoor unit (OC) to terminals M1 and M2 on the terminal S on the transmission cable block of the indoor unit (IC).
c. Connect terminals M1 and M2 on the transmission cable terminal block of the indoor unit (IC) that has the most recent address within the same group to the terminal block on the remote controller (RC).
d. Connect together terminals M1, M2 and terminal S on the terminal block for central control (TB7) for the outdoor unit (OC).
e. DO NOT change the jumper connector CN41 on MULTI controller board.
f. The earth processing of S terminal for the centralized control terminal block(TB7) is unnecessary.
Connect the terminal S on the power supply unit with the earth.
g. Set the address setting switch as follows.

Unit	Range	Setting Method
IC (Main)	01 to 00	Use the smallest address within the same group of indoor units.
IC (Sub)	01 to 50	Use an address, other than that of the IC (Main) in the same group of indoor units. This must be in sequence with the IC (Main).
Outdoor Unit	51 to 100	Use the smallest address of all the indoor units plus 50. *The address automatically becomes “100” if it is set as “01 - 50”.
Main Remote Controller	101 to 150	Set at an IC (Main) address within the same group plus 100.
Sub Remote Controller	151 to 200	Set at an IC (Main) address within the same group plus 150.
MA Remote Controller	—	Unnecessary address setting (Necessary main/ sub setting)

h. The group setting operations among the multiple indoor units is done by the remote controller (RC) after the electrical power has been turned on.

• **Name, Symbol, and the Maximum Units for Connection**

Permissible Length	• Longest length via outdoor units : $L_1+L_2+L_3+L_4$, $L_1+L_2+L_3+L_5$, $L_1+L_2+L_6+L_7 \leqq$ 500 meters [1640ft] (1.25mm² [AWG16]) • Longest transmission cable length : L_1, L_3+L_4, L_3+L_5, L_6, L_2+L_6, $L_7 \leqq$ 200 meters (1.25mm² [AWG16]) • Remote controller cable length : ℓ_1, ℓ_2, $\ell_2+\ell_3$, $\ell_4 \leqq$ 10 meters [33ft] (0.5 to 1.25mm² [AWG20 to AWG16]) If the length exceeds 10 meters [33ft], use a 1.25 mm² [AWG16] shielded wire. The length of this section (L_8) should be included in the calculation of the maximum length and overall length.
Prohibited items	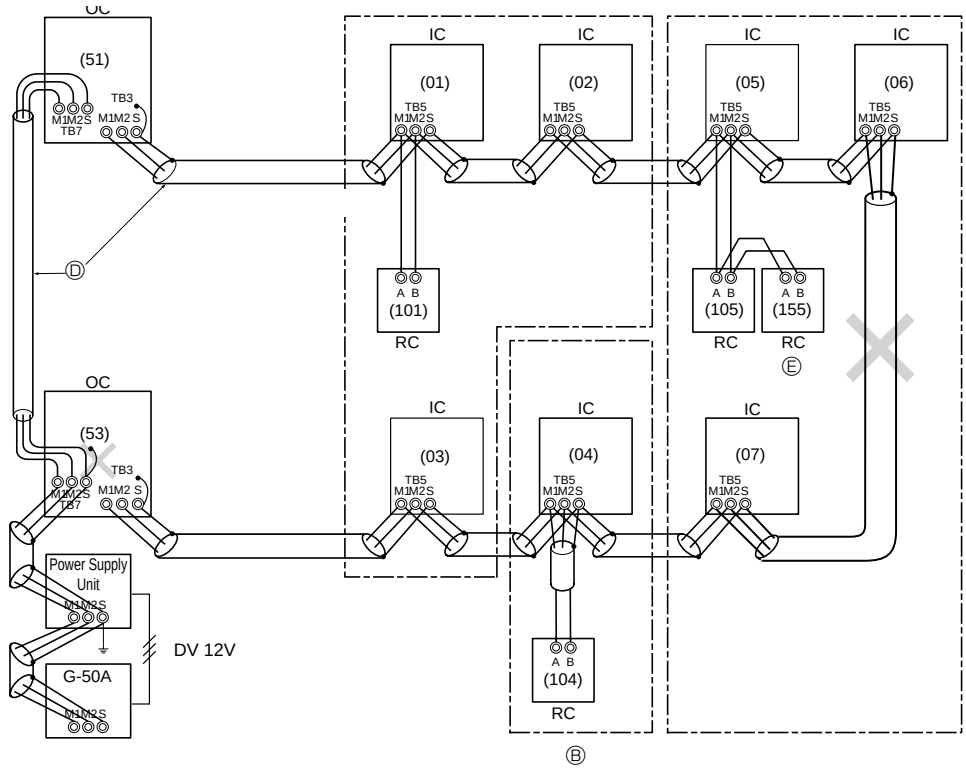 Ⓐ : Group 1 Ⓑ : Group 3 Ⓒ : Group 5 Ⓓ : Shielded Wire Ⓔ : Sub Remote Controller ( ): Address • Never connect together the terminal blocks (TB5) for transmission wires for indoor units (IC) that have been connected to different outdoor units (OC). • Set all addresses to ensure that they are not overlapped. • M-NET remote controller and MA remote controller cannot be connected with the indoor unit of the same group wiring together.

C. Example of a MA remote controller system (address setting is not necessary.)
NOTE : In the case of same group operation, need to set the address that is only main indoor unit.

Example of wiring control cables	Wiring Method and Address Setting
1. Standard operation 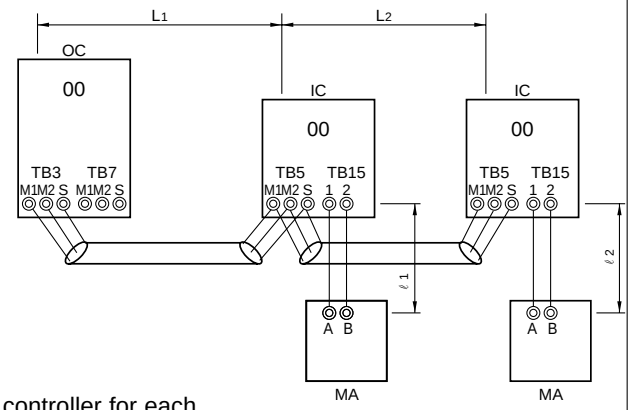 • 1 remote controller for each indoor unit.	a. Use feed wiring to connect terminals M1 and M2 on transmission cable block (TB3) for the outdoor unit (OC) to terminals M1 and M2 on the transmission cable block (TB5) of each indoor unit (IC). Use non-polarized 2 wire. b. Connect terminals 1 and 2 on transmission cable terminal block (TB15) for each indoor unit with the terminal block for the MA remote controller (MA).
2. Operation using 2 remote controllers 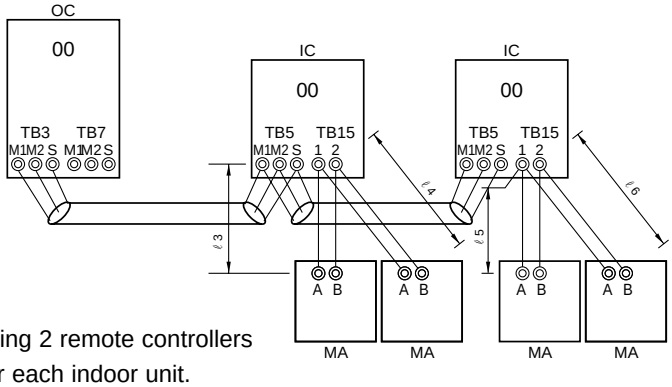 • Using 2 remote controllers for each indoor unit.	a. The same as above. b. The same as above. c. In the case of using 2 remote controllers, connect terminals 1 and 2 on transmission cable terminal block (TB15) for each indoor unit with the terminal block for 2 remote controllers. · Set the sub remote controller position for one of MA remote controller's main switch. Refer to the installation manual of MA remote controller
3. Group operation 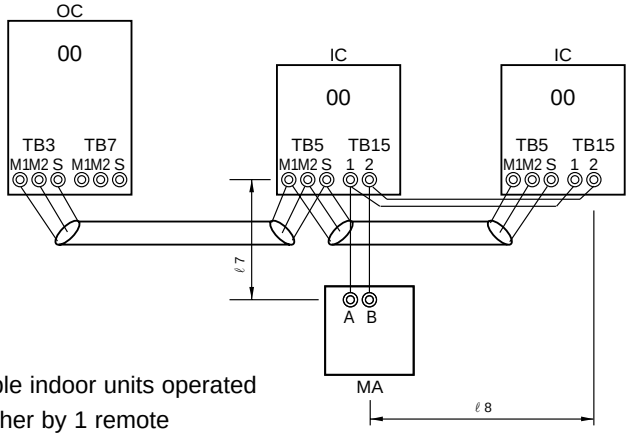 • Multiple indoor units operated together by 1 remote controller	a. The same as above. b. The same as above. c. Connect terminals 1 and 2 on transmission cable terminal block (TB15) of each indoor unit, which is doing group operation with the terminal block the MA remote controller. Use non-polarized tow wire. d. In the case of same group operation, need to set the address that is only main indoor unit. Please set the address of the indoor unit with the most functions in the same group in the number that 01-50 is young.
Combinations of 1through 3 above are possible.	

• **Name, Symbol, and the Maximum Units for Connection**

Permissible Lengths	Prohibited items
Longest transmission cable length $L_1 + L_2 \leqq 200$m [656ft] (1.25 mm² [AWG16]) MA remote controller cable length ℓ_1, $\ell_2 \leqq 200$m [656ft] (0.3 ~ 1.25 mm² [AWG22 to AWG16])	The MA remote controller and the M-NET remote controller cannot be used together with the indoor unit the of the same group. 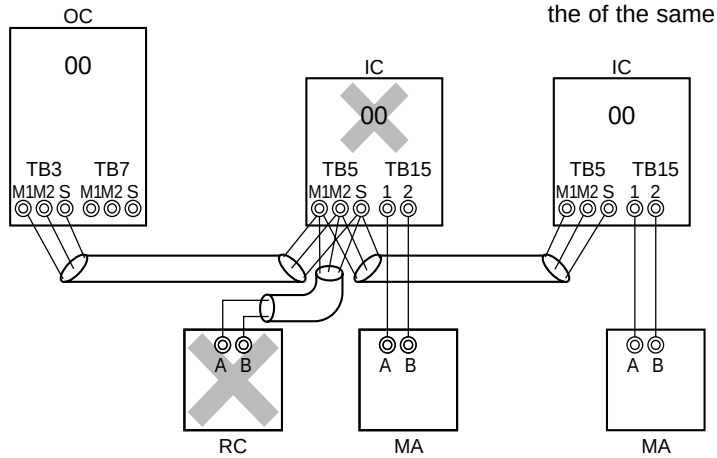
Longest transmission cable length The same as above. MA remote controller cable length $\ell_3 + \ell_4$, $\ell_5 + \ell_6 \leqq 200$m [656ft] (0.3 ~ 1.25 mm² [AWG22 to AWG16])	Three MA remote controller or more cannot be connect with the indoor unit of the same group. 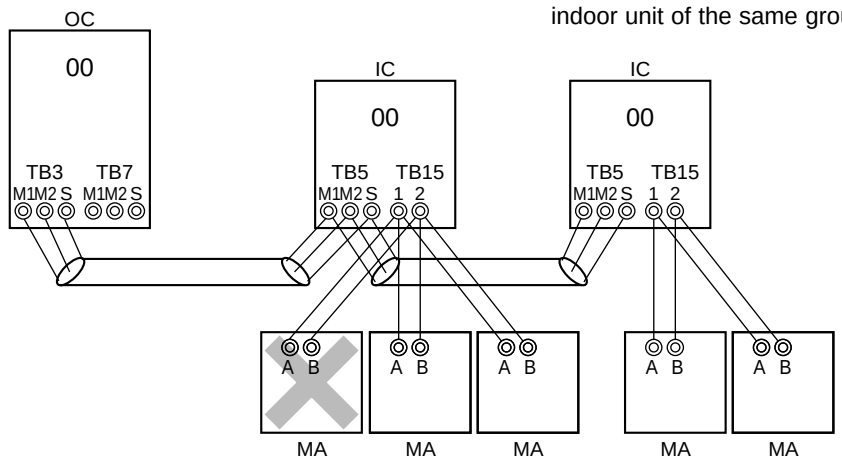
Longest transmission cable length The same as above. MA remote controller cable length $\ell_7 + \ell_8 \leqq 200$m [656ft] (0.3 ~ 1.25 mm² [AWG22 to AWG16])	The second MA remote controller is connected with the terminal block(TB15) for the MA remote controller of the same indoor unit(IC) as the first remote control. 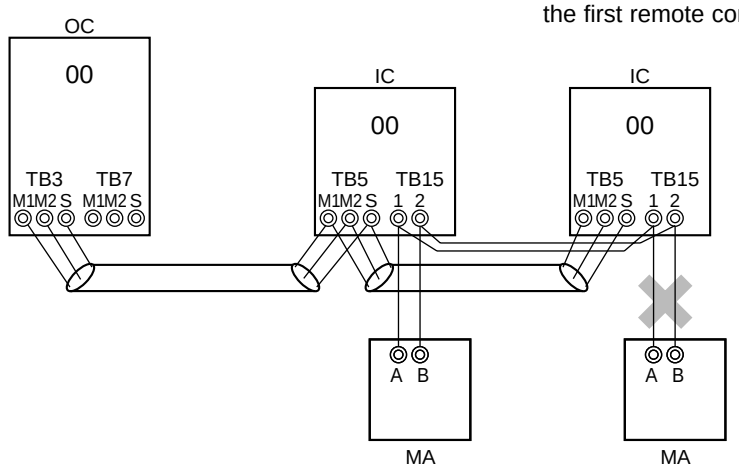

D. Example of a group operation with 2 or more outdoor units and a MA remote controller.
(Shielding wires and address settings are necessary.)

Examples of Transmission Cable Wiring

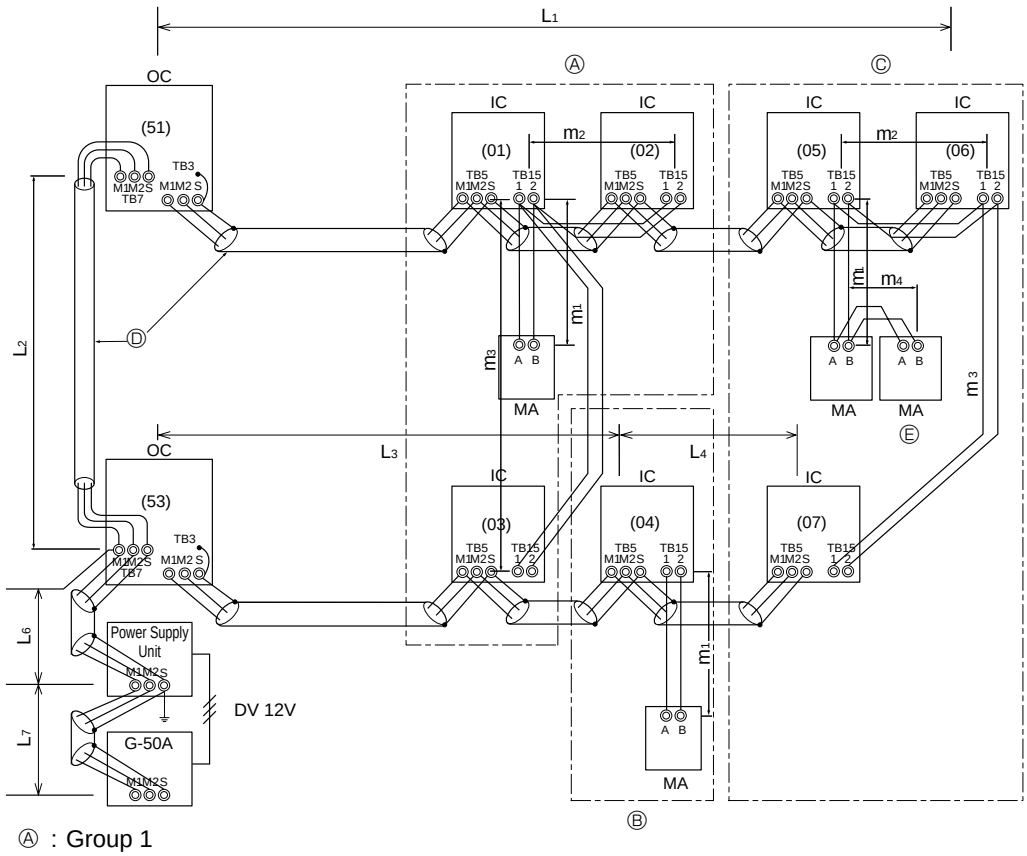

Ⓐ : Group 1
Ⓑ : Group 3
Ⓒ : Group 5
Ⓓ : Shielded Wire
Ⓔ : Sub Remote Controller
( ): Address

Wiring Method Address Settings

a. Always use shielded wire when making connections between the outdoor unit (OC) and the indoor unit (IC), as well for all OC-OC, and IC-IC wiring intervals.
b. Use feed wiring to connect terminals M1 and M2 and the ground terminal on the transmission cable terminal block (TB3) of each outdoor unit (OC) to terminals M1 and M2 on the terminal S on the transmission cable block of the indoor unit (IC).
c. Connect terminals M1 and M2 on the transmission cable terminal block of the indoor unit (IC) that has the most recent address within the same group to the terminal block on the remote controller (RC).
d. Connect together terminals M1, M2 and terminal S on the terminal block for central control (TB7) for the outdoor unit (OC).
e. DO NOT change the jumper connector CN41 on MULTI controller board.
f. The earth processing of S terminal for the centralized control terminal block(TB7) is unnecessary.
Connect the terminal S on the power supply unit with the earth.
g. Set the address setting switch as follows.

Unit	Range	Setting Method
IC (Main)	01 to 00	Use the smallest address within the same group of indoor units.
IC (Sub)	01 to 50	Use an address, other than that of the IC (Main) in the same group of indoor units. This must be in sequence with the IC (Main).
Outdoor Unit	01 to 100	Use the smallest address of all the indoor units plus 50. *The address automatically becomes “100” if it is set as “01 - 50”.
Main Remote Controller	101 to 150	Set at an IC (Main) address within the same group plus 100.
Sub Remote Controller	151 to 200	Set at an IC (Main) address within the same group plus 150.
MA Remote Controller	—	Unnecessary address setting (Necessary main/ sub setting)

h. The group setting operations among the multiple indoor units is done by the remote controller (RC) after the electrical power has been turned on.

• **Name, Symbol, and the Maximum Units for Connection**

Permissible Length	Longest length via outdoor unit (M-NET cable): $L_1+L_2+L_3+L_4$ and $L_1+L_2+L_6+L_7$ ≦ 500 m [1640ft] (1.25 ㎟ [AWG16] or more) Longest transmission cable length (M-NET cable): L_1 and L_3+L_4 and L_6 and L_2+L_6 and L_7 ≦ 200 m [656ft] (1.25 ㎟ [AWG16] or more) Remote controller cable length: m1 and m1+m2+m3 and m1+m2+m3+m4 ≦ 200 m [656ft] (0.3 to 1.25 ㎟ [AWG20 to AWG16])
Prohibited items	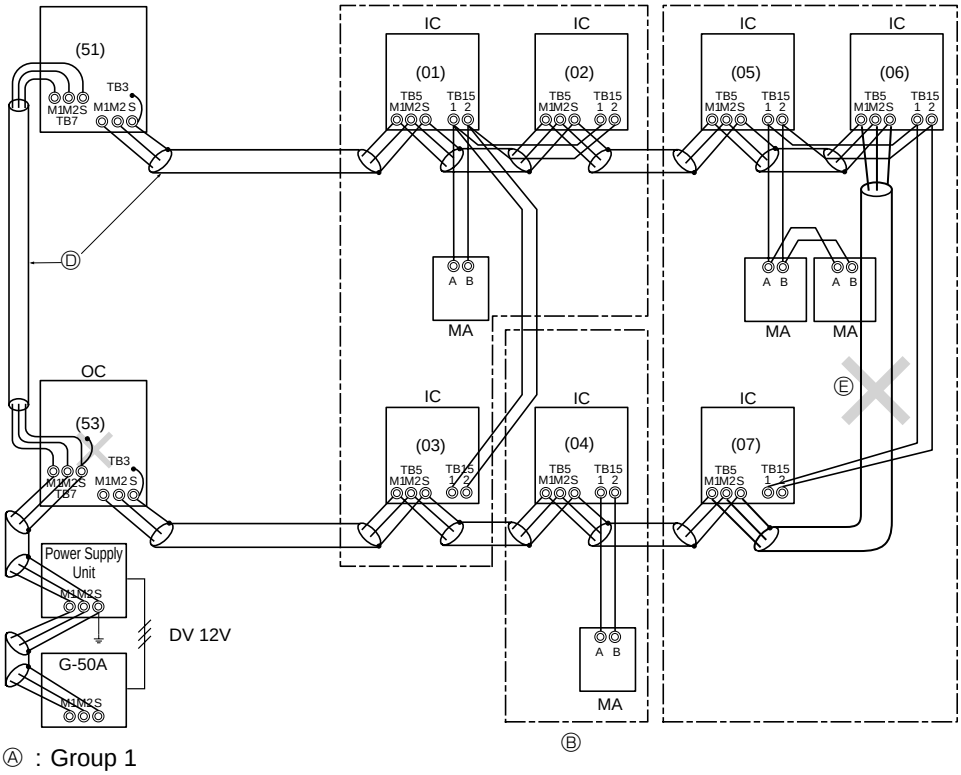 Ⓐ : Group 1 Ⓑ : Group 3 Ⓒ : Group 5 Ⓓ : Shielded Wire Ⓔ : Sub Remote Controller ( ): Address • Never connect together the terminal blocks (TB5) for transmission wires for indoor units (IC) that have been connected to different outdoor units (OC). • M-NET remote controller and MA remote controller cannot be connected with the indoor unit of the same group wiring together.

9 TROUBLESHOOTING

9-1. CHECK POINTS FOR TEST RUN

9-1-1. Procedures of test run

(1) Before test run, make sure that following work is completed.

- Installation related :
  Make sure that the panel of cassette type and electrical wiring are done.
  Otherwise electrical functions like auto vane will not operate normally.
- Piping related :
  Perform leakage test of refrigerant and drain piping.
  Make sure that all joints are perfectly insulated.
  Check stop valves on both liquid and gas side for full open.
- Electrical wiring related :
  Check ground wire, transmission cable, remote controller cable, and power supply cable for secure connection.
  Make sure that all switch settings of address or adjustments for special specification systems are correctly settled.

(2) Safety check :
With the insulation tester of 500V, inspect the insulation resistance.
Do not touch the transmission cable and remote controller cable with the tester.
The resistance should be over 1.0 M . Do not proceed inspection if the resistance in under 1.0 M .
Inspect between the outdoor unit power supply terminal block and ground first, metallic parts like refrigerant pipes or the electrical box next, then inspect all electrical wiring of outdoor unit, indoor unit, and all linked equipment .

(3) Before operation :
a) Turn the power supply switch of the outdoor unit to on for compressor protection.For a test run, wait at least 12 hours from this point.
b) Register control systems into remote controller(s). Never touch the on/ off switch of the remote controller(s). Refer to " 9-1-2 Special Function Operation and Settings (for M-NET Remote Controller)" as for settings . In MA remote controller(s), this registration is unnecessary.

(4) More than 12 hours later from power supply to the outdoor unit, turn all power switch to on for test run. Perform test run according to the "Operation procedure" table of the bottom of this page. While test running, make test run reports .

(5) When you deliver the unit after test run, instruct the end user for proper usage of the system using owners' manual and the test run report you made to certificate normal operation. If abnormalities are detected during test run, refer to " 9-1-3 Countermeasures for Error During Test Run". As for DIP switch setting of outdoor unit, refer to" 9-5. INTERNAL SWITCH FUNCTION TABLE".

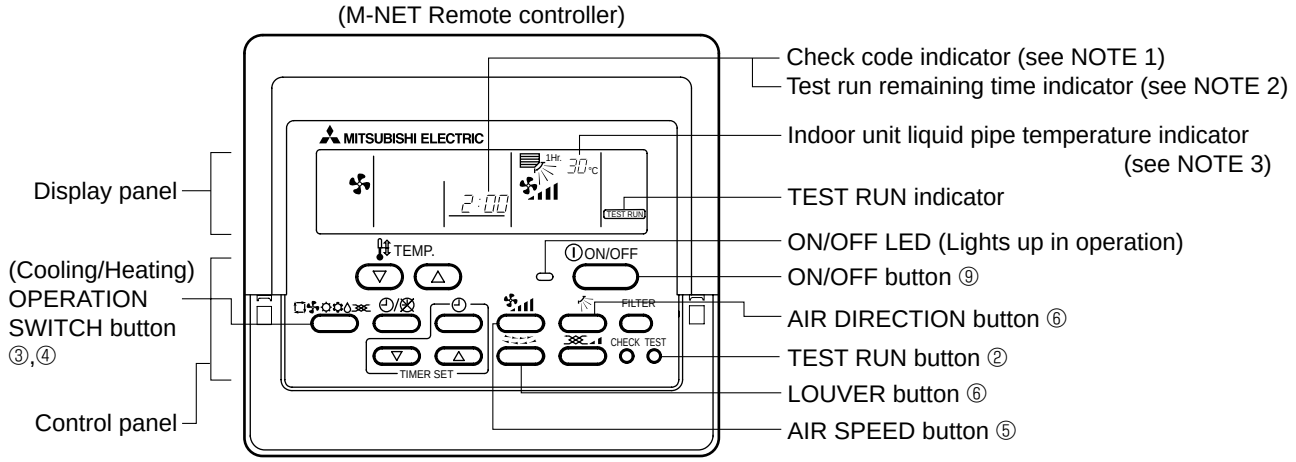

	Operation procedure
①	Turn on the main power supply of all units at least 12 hours before test run. "HO" appears on display panel for 3 min.
②	12 hours later, press TEST RUN button twice to perform test run. "TEST RUN " appears on display panel.
③	Press OPERATION SWITCH button to make sure that air blows out.
④	Select Cooling (or Heating) by OPERATION SWITCH button to make sure that cool (or warm) air blow out.
⑤	Press Fan speed button to make sure that fan speed is changed by the button.
⑥	Press AIR DIRECTION button or LOUVER button to make sure that air direction is adjustable(horizontal, downward, upward, and each angle).
⑦	Check outdoor fans for normal operation.
⑧	Check interlocked devices (like ventilator) for normal operation, if any. This is the end of test run operation.
⑨	Press ON/OFF button to stop and cancel test run.

NOTE 1 : If error code appears on remote controller or remote controller malfunction , refer to " 9-1-3 Countermeasures for Error During Run".
NOTE 2 : During test run operation 2-hours off timer activates automatically and remaining time is on remote controller and test run stops 2 later.
NOTE 3 : During test run, the indoor liquid pipe temperature is displayed on remote controller instead of room temperature.
NOTE 4 : Depend on a model, "This function is not available" appears when air direction button is pressed, however, this is not malfunction.

9-1-2. Special Function Operation and Settings (for M-NET Remote Controller)

- It is necessary to perform “group settings” and “paired settings” at making group settings of different refrigerant systems (multiple outdoor unit).
  (A) Group settings: Enter the indoor unit controlled by the remote controller, check the content of entries, and clear entries, etc.
  (B) Paired settings: Used to set the linked operation of a Lossnay unit.

(1) Entering address: Follow the steps below to enter the addresses of the indoor unit using the remote controller.

a) Group settings

- Turning off the remote controller: Press the ON/OFF button to stop operation (the indicator light will go off).
- Changing to indoor unit address display mode: If the FILTER and buttons on the remote controller are pressed simultaneously and held for 2 seconds, the display shown in Figure 1 will appear.
- Changing address: Press the temperature adjustment ▲ ▼ buttons to change the displayed address to the address to be entered.
- Entering the displayed address: Press the TEST RUN button to enter the indoor unit with the displayed address. The type of the unit will be displayed as shown in Figure 2 if entry is completed normally.
  If a selected indoor unit does not exist, an error signal will be displayed as shown in Figure 3. When this happens, check whether the indoor unit actually exists and perform entry again.
- Returning to the normal mode after completing entry: Press the FILTER and buttons simultaneously and hold for 2 seconds to return to the normal mode.

Figure 1. (A) Group setting display

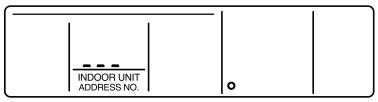

Figure 2. Normal completion of entry

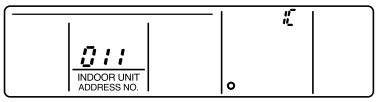

Type of unit is displayed.

Figure 3. Entry error signal

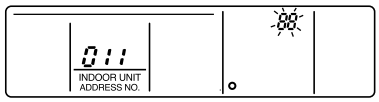

Flashing “88” indicates entry error.

b) Paired Settings

- Turn off the remote controller: Press the remote controller’s ON/OFF button to turn it off (the indicator light will go off).
- Put in indoor unit address display mode: Press the FILTER and buttons on the remote controller simultaneously and hold for two seconds.
  *The above steps are the same as when making group settings (A).
- Changing to the linked operation unit address display state: The display shown in Figure 4 will appear when the button on the remote control is pressed.
- Displaying the address of the Lossnay unit and linked indoor unit: In this situation, the indoor unit number will be the lowest address of the group. The Lossnay unit will not operate if this setting is incorrect.
  *If the temperature adjustment ▲ ▼ buttons are pressed, the address may be changed to the indoor unit that are to be linked.
  *If the time setting ▲ ▼ buttons are pressed, the address of the linked units may be changed to the address where it is desired to enter the Lossnay .
- Linking the Lossnay and the indoor unit: The display shown in Figure 5 will appear when the TEST RUN button is pressed. The indoor unit whose address is displayed and the Lossnay unit with a linked address will operate in a linked manner.
  *If it is desired to display the address of the Lossnay in the indoor unit address, display the indoor unit address in the linked unit address, and the above content will also be recorded.
  * Apart from the indoor unit with the lowest address in the group, display and enter the addresses of the other indoor unit that are to be linked with the Lossnay unit.
- Returning to the normal mode after completing entry: Press the FILTER and buttons on the remote controller simultaneously and hold for 2 seconds to return to the normal mode.

Figure 4. (B) Making paired settings

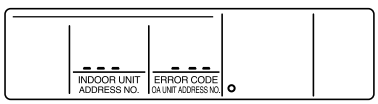

The addresses of indoor unit and linked units are displayed simultaneously.

Figure 5. Completing normal entry

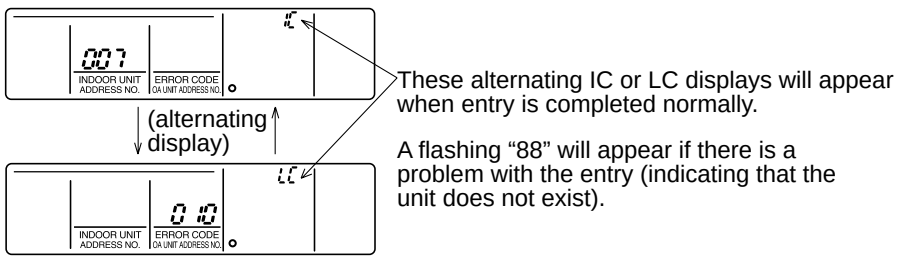

(2) Address check: Refer to section (1) regarding address entry.

a) In making group settings:

- Turn off the remote controller: Press the remote controller's ON/OFF button to stop operation (the indicator light will go off).
- Locate the indoor unit address display mode: Press the FILTER and buttons on the remote controller simultaneously and hold for 2 seconds.
- Display indoor unit address: The entered indoor units address and type will be displayed each time the button is pressed.
  * When one entry is made, only 1 address will be displayed no matter how many times the button is pressed.
- Returning to the normal mode after completing check: Simultaneously press the FILTER and buttons on the remote controller and hold for 2 seconds to return to the normal mode.

b) In making paired settings:

- Turn off the remote controller: Press the remote controller's ON/OFF button to stop operation (the indicator light will go off).
- Put in indoor unit address display mode: Press the FILTER and buttons on the remote controller simultaneously and hold for 2 seconds.
- Changing to the linked operation unit address display state: Press the button on the remote control.
- Displaying the address of the indoor unit to be checked: Change the address to that of the indoor unit to be checked by pressing the temperature adjustment buttons ▲ ▼.
- Displaying the address of the linked Lossnay unit: Press the button to display the addresses of the linked Lossnay and indoor unit in alternation.
- Displaying the addresses of other entered units: The addresses of the other entered units will be displayed in alternating fashion after resting the button again.
- Returning to the normal mode after completing the check: Simultaneously press the FILTER and buttons on the remote controller and hold for 2 seconds to return to the normal mode.

(3) Clearing an address: Refer to section (1) regarding the address entry and section (2) regarding checking addresses.

a) In making group settings:

- Turn off the remote controller: The procedure is same as **a)** in (2) Address check.
- Put in the indoor unit address display mode: The procedure is same as **a)** in (2) Address check.
- Displaying the indoor unit address to be cleared: The procedure is same as **a)** in (2) Address check.
- Clearing indoor unit address : ....Pressing the button on the remote controller twice will clear the address entry of the displayed indoor unit, resulting in the display shown in Figure 6.
  The display shown in Figure 7 will appear if an abnormality occurs and the entry is not cleared. Please repeat the clearing procedure.
- Returning to the normal mode after clearing an address: The procedure is same as **a)** in (2) Address check.

Figure 6. Display after address has been cleared normally

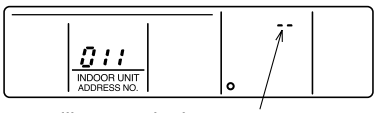

"--" will appear in the room temperature display location.

Figure 7. Display when an abnormality has occurred during clearing

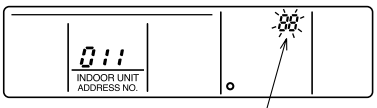

"88" will appear in the room temperature display location.

b) In making paired settings:

- Turn off the remote controller: The procedure is same as **b)** in (2) Address check.
- Put into the indoor unit address display mode: The procedure is same as **b)** in (2) Address check.
- Put into the linked unit address display mode: The procedure is same as **b)** in (2) Address check.
- Display the address of the Lossnay unit or the indoor unit to be cleared.
- Deleting the address of a linked indoor unit: Pressing the button on the remote controller twice will clear the address entry of the displayed indoor unit, resulting in the display shown in Figure 8.
- Returning to the normal mode after clearing an address: The procedure is same as **b)** in (2) Address check.

Figure 8. Display after address has been cleared normally

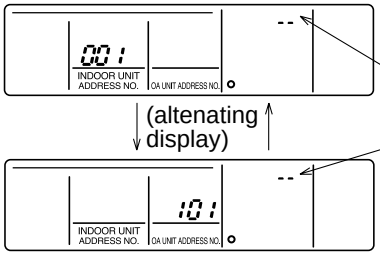

"--" will appear in the unit type display location when an address has been cleared normally.

"88" will appear in the unit type display location when an abnormality has occurred during clearing.

9-1-3. Countermeasures for Error During Test Run

• If a problems occurs during test run, a code number will appear in the temperature display area on the remote controller (or LED on the outdoor unit), and the air conditioning system will automatically cease operating.
Determine the nature of the abnormality and apply corrective measures.

Check code	Trouble	Detected unit			Remarks
		Indoor	Outdoor	Remote controller	
0403	Serial transmission trouble		○		Outdoor unit Multi controller board ~ Power board communiation trouble
1102	Discharge temperature trouble		○		Check delay code 1202
1300	Low pressure trouble		○		Check delay code 1400
1302	High pressure trouble		○		Check delay code 1402
1500	Excessive refrigerant replenishment		○		Check delay code 1600
1501	Insufficient refrigerant trouble				Check delay code 1601
1505	Vacuum operation protection		○		
2500	Water leakage	○			
2502	Drain pump trouble	○	○		
2503	Drain sensor trouble (THd)	○			
4100	Overcurrent trouble (Overload, compressor lock)		○		Check delay code 4350
4115	Power synchronization signal trouble		○		Check delay code 4165
4220	Inverter trouble		○		Check delay code 4320
4230	Overheat protection of radiator panel		○		Check delay code 4330
4250	Power module trouble or Overcurrent trouble		○		Check delay code 4350
4400	Fan controller trouble (Outdoor)		○		Check delay code 4500
5101	Air inlet sensor trouble (TH21) or	○			
	Discharge temperature sensor trouble (TH4)		○		Check delay code 1202
5102	Liquid pipe temp.sensor trouble (TH22) or	○			
	Low pressure saturated temp.sensor trouble (TH6)		○		Check delay code 1211
5103	Gas pipe temperature sensor trouble (TH23)	○			
5105	Piping temperature sensor trouble (TH3)		○		Check delay code 1205
5106	Outdoor temperature sensor trouble (TH7)		○		Check delay code 1221
5110	Heatsink temperature sensor trouble (TH8)				Check delay code 1214
5201	Pressure sensor trouble (63HS)				Check delay code 1402
5300	Curnent sensor trouble		○		Check delay code 4310
5701	Contact failure of drain float switch	○			
6600	Dupricated unit address setting	○	○	○	Only M-NET Remote controller is detected.
6602	Transmission error (Transmission processor hardware error)	○	○	○	Only M-NET Remote controller is detected.
6603	Transmission error (Transmission route BUSY)	○	○	○	Only M-NET Remote controller is detected.
6606	Transmission and reception error (Communication trouble with transmission processor)	○	○	○	Only M-NET Remote controller is detected.
6607	Transmission and reception error (No ACK error)	○		○	Only M-NET Remote controller is detected. ※
6608	Transmission and reception error (No responsive frame error)	○		○	Only M-NET Remote controller is detected. ※
6831	MA communication receive signal error (no receive signal)	○		○	Only MA Remote controller is detected.
6832	MA commnication send signal error (starting bit derection error)	○		○	Only MA Remote controller is detected.
6833	MA commnication send error (H/W error)	○		○	Only MA Remote controller is detected.
6834	MA commnication receive error (Synchronous recovery error)	○		○	Only MA Remote controller is detected.
7100	Total capacity error		○		
7101	Capacity code error	○	○		
7102	Connecting unit number error		○		
7105	Address set error		○		
7111	Remote controller sensor trouble			○	

NOTE) ※

When the outdoor unit detects No ACK error/ No responsive frame error, an object indoor unit is treated as a stop, and not assumed to be abnormal.

Self-diagnosis function
The indoor and outdoor units can be diagnosed automatically using the self-diagnosis switch (SW1) and LED1, LED2 (LED indication) found on the multi-controller of the outdoor unit.
LED indication : Set all contacts of SW1 to OFF.
During normal operation
The LED indicates the drive state of the controller in the outdoor unit.

Bit	1	2	3	4	5	6	7	8
Indication	Compressor operated	52C	21S4	SV1	(SV2)	—	—	Always lit

[Example]
When the compressor and SV1 are turned during cooling operation.

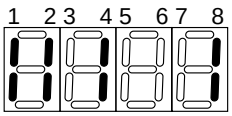

Display	Abnormal point and detecting method	Causes	Check points
1102	**High discharging temperature** Abnormal if discharge temperature thermistor (TH4) exceeds 125℃ [257°F] or 110℃ [230°F] continuously for 5 minutes. Abnormal if pressure detected by high pressure sensor and converted to saturation temperature exceeds 40℃ [104°F] during defrosting and discharge temperature thermistor (TH4) exceeds 110℃ [230°F] .	① Over-heated compressor operation caused by shortage of refrigerant ② Defective operation of stop valve ③ Defective thermistor ④ Defective outdoor controller board ⑤ Defective action of linear expansion valve	① Check intake super heat. Check leakage of refrigerant. Charge additional refrigerant. ② Check if stop valve is fully open. ③④ Turn the power off and check if 5101 is displayed when the power is turned again. When 5101 is displayed, refer to “Check points” for 5101. ⑤ Check linear expansion valve.
1300	**Low pressure (63L worked)** Abnormal if 63L is worked (under- 0.03MPa [-4.35PSIG]) during compressor operation. 63L: Low-pressure switch	① Stop valve of outdoor unit is closed during operation. ② Disconnection or loose connection of connector (63L) on outdoor controller board ③ Disconnection or loose connection of 63L ④ Defective outdoor controller board ⑤ Leakage or shortage of refrigerant ⑥ Malfunction of linear expansion valve	① Check stop valve. ②~④ Check the connector (63L) on outdoor controller board. ⑤ Correct to proper amount of refrigerant. ⑥ Check linear expansion valve.
1302	**(1) High pressure (High-pressure switch 63H worked)** Abnormal if high-pressure switch 63H worked (※) during compressor operation. ※ 4.15 MPa [602PSIG] 63H: High-pressure switch **(2) High pressure** (High - pressure sensor 63HS detect) Abnormal if high-pressure sensor detects 4.31MPa [625PSIG] or more (or over 4.15MPa [602PSIG] for 3 minutes) during the compressor operation.	① Short cycle of indoor unit ② Clogged filter of indoor unit ③ Decreased airflow caused by dirt of indoor fan ④ Dirt of indoor heat exchanger ⑤ Locked indoor fan motor ⑥ Malfunction of indoor fan motor ⑦ Defective operation of stop valve (Not fully open) ⑧ Clogged or broken pipe ⑨ Locked outdoor fan motor ⑩ Malfunction of outdoor fan motor ⑪ Short cycle of outdoor unit ⑫ Dirt of outdoor heat exchanger ⑬ Decreased airflow caused by defective inspection of outside temperature thermistor (It detects lower temperature than actual temperature.) ⑭ Disconnection or contact failure of connector (63H) on outdoor controller board ⑮ Disconnection or contact failure of 63H connection ⑯ Defective outdoor controller board ⑰ Defective action of linear expansion valve ⑱ Malfunction of fan driving circuit ⑲ Solenoid valve (SV1) performance failure (High-pressure cannot be controlled by SV1.) ⑳ High-pressure sensor defective ㉑ High-pressure sensor input circuit defective in multi controller board	①~⑥ Check indoor unit and repair defectives. ⑦ Check if stop valve is fully open. ⑧ Check piping and repair defectives. ⑨~⑫ Check outdoor unit and repair defectives. ⑬ Check the inspected temperature of outside temperature thermistor on LED display. ⑭~⑯ Check the connector (63H) on outdoor controller board. ⑰ Check linear expansion valve. ⑱ Replace outdoor controller board. ⑲ Check the solenoid valve performance. ⑳ Check the high-pressure sensor. ㉑ Check the high-pressure sensor.
1500	**Superheat due to low discharge temperature** Abnormal if discharge superheat is continuously detected less than or equal to -15℃ [-27°F] even though linear expansion valve has minimum open pulse after compressor starts operating for 10 minutes.	① Disconnection or loose connection of discharge temperature thermistor (TH4) ② Defective holder of discharge temperature thermistor	①② Check the installation conditions of discharge temperature thermistor (TH4).

Display	Abnormal point and detecting method	Causes	Check points
1501	**Refrigerant shortage** When the conditions of below detecting mode Ⅰ or Ⅱ are satisfied during the compressor operation. <Detecting mode Ⅰ> When the below conditions are satisfied completely. 1. Compressor is operating in HEAT mode. 2. Discharge superheat is 80℃ [144°F] or more. 3. Difference of outer temperature thermistor (TH7) and outdoor piping temp. thermistor (TH3) applies to the formula of (TH7-TH3)<5℃ [9°F] . 4. High-pressure sensor is below about 2.04MPa [296PSIG] . <Detecting mode Ⅱ> When the below conditions are satisfied completely. 1. Compressor is operating. 2. When cooling, discharge superheat is 80℃ [144°F] or more. When heating, discharge superheat is 90℃ [162°F] or more. High pressure sensor is below about 2.32MPa [337PSIG] .	① Gas leakage, Gas shortage ② When heating operation, refrigerant shortage feeling operation (When heating, airflow or thermo OFF are mixed-operation, it causes a refrigerant shortage operation.) ③ Ball valve performance failure (not full opened.) ④ Error detection of discharge superheat 1) High-pressure sensor defective 2) Discharge temperature thermistor defective 3) Thermistor input circuit defective and high-pressure sensor defective in multi controller board ⑤ Error detection of TH7/TH3 1) Thermistor defective 2) Thermistor input circuit defective in multi controller board	① Check the refrigerant amount. ② Check the operation condition and refrigerant amount. ③ Check the ball valve is fully open. ④ 1) Check the ball valve is fully open. 2) Check the resistance of discharge temperature thermistor. 3) According to “Outdoor unit functions”, set the SW2 and check the high-pressure sensor level. According to “Outdoor unit functions”, check the discharge temp. thermistor level. When the high-pressure sensor and discharge temp. thermistor are normal, if the above mentioned detecting pressure level and temp. are big different from the actual pressure and temp. replace the multi controller board. ⑤ 1) Check the resistance of thermistor. 2) According to “Outdoor unit functions”, check the outdoor pipe temp. thermistor level. 3) According to “Outdoor unit functions”, check the outer temp. thermistor level.
2500 (Float switch model)	**Water leakage** 1. Suspensive Abnormality when float switch detects to be in the water and drain pump turns on and off except during cooling or dry mode. 2. Abnormal when detecting that the drain pump turns on and off again within 1 hour after the detection of water leakage suspensive abnormality, and repeats the detection twice. <2500> is displayed. 3. The unit continues to detect abnormality while turned off. 4. To release water leakage suspensive abnormality · When not detecting that the drain pump turns off and on within 1 hour after detecting suspensive abnormality. · When turning to cooling operation or dry operation. · Detected that [liquid pipe temperature – room temperature]≦ -10deg[-18°F]	① Defective drain Clogged drain pump Clogged drain pipe Adverse flow of drain in other units ② Defective moving part of float switch Foreign matter on the moving part of float switch(ex. sludge etc.) ③ Defective float switch	① Check the drain function. ② Check moving part of float switch. ③ Check the value of resistance with the float switch ON/OFF.

Operation mode: When drain pump turns on as float switch detects to be in the water except during cooling/dry mode

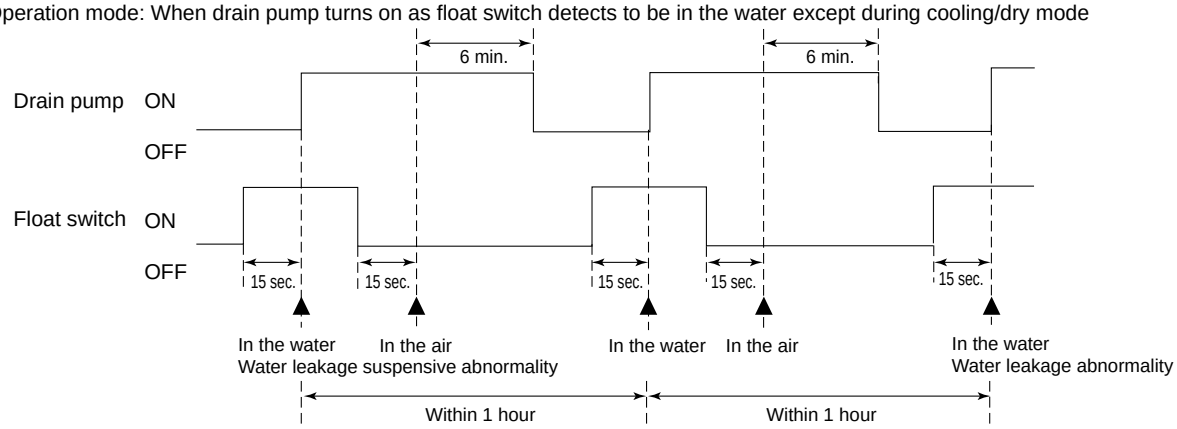

Display	Abnormal point and detecting method	Causes	Check points
2502 (Drain sensor model)	**Drain pump (DP)** ① Let drain sensor self-heated, and if temperature rises slightly, as suspensive abnormality operation stops and changes to protect mode of restarting in 3 minutes. ② Drain pump is abnormal if the condition above is detected during suspensive abnormality. <2502> is displayed. ③ Malfunction of drain pipe is constantly detected during drain pump operation. ④ The unit enters to forced outdoor unit stop when following conditions, a) and b), are satisfied (while the above mentioned detection is performed). a) The drain sensor detects to be soaked in the water 10 times in a row. b) The room teperature subtracted with liquid pipe temperature is detected to be less than -10℃[-18°F] continuously for 30 minutes. (When the drain sensor detects to be NOT soaked in the water, the detection record of a) and b) will be cleared.) ※ Drain pump abnormality (above ①~③) is detected before it becomes an outdoor unit forced stop condition. ⑤ When indoor unit detects above ④ condition, outdoor unit in same refrigerant sytem stops. Also, indoor unit except for Fan or OFF mode unit stop. 2502 is displayed on stopped unit. ⑥ Detection timing of forced outdoor unit stop Constantly detected during unit operation and stop ⑦ Releasing of forced outdoor unit stop Reset power supply of both abnormal indoor unit and its outdoor unit in same refrigerant system. Forced outdoor unit stop cannot be released by remote controller OFF. **NOTE)** **Above-mentioned ①~③ and ④~⑦ are detected independently.**	① Malfunction of drain pump ② Defective drain Clogged drain pump Clogged drain pipe ③ Water drops on drain sensor • Drops of drain trickles from lead wire. • Clogged filter is causing wave of drain. ④ Defective indoor controller board ⑤ Both of above mentioned ①~④ and the indoor linear expansion valve full-closed failure (leakage) happens synchronistically. (Note) Address/Attribute displayed on the remote controller shows the indoor unit which is cause of trouble.	① Check if drain-up machine works. ② Check drain function. ③ Check the setting of lead wire of drain sensor and check clogs of the filter. ④ Replace indoor controller board when there is no problem in the above mentioned ①~③. ⑤Check whether the indoor linear expansion valve leaks or not.

Display	Abnormal point and detecting method	Causes	Check points
2502 (Float switch model)	**Drain pump (DP)** ① Judge whether the sensor is in the water or in the air by turning the float switch ON/OFF. In the water: Detected that the float switch is ON for 15 seconds. In the air:Detected that the float switch is OFF for 15 seconds. ② When the float switch remains to be turned ON for 3 minutes after detected to be in the water, the drain pump is judged to be abnormal and <2502> will be displayed. *It takes 3 minutes and 15 seconds to detect abnormality including the time to judge to be in the water. ③ The unit continue to detect abnormality while turned off. ④ When the conditions below 1, 2 and Forced outdoor unit stop condition are met 1. Detected that [liquid pipe temperature – room temperature]≦ -10deg[-18°F] for 30 minutes constantly. 2. Float switch detects to be in the water for 15 minutes constantly. *Before Forced outdoor unit stop Condition is met, the unit always detects ①-③ above. ⑤ The indoor unit detecting ④ above stops due to detecting abnormality the outdoor unit in same refrigerant system (compressor is inhibited to operate). The unit which stops due to detecting abnormality displays <2502>. ⑥ Detection timing of forced outdoor unit stop Constantly detected during unit operation and stop ⑦ Releasing of forced outdoor unit stop Reset power supply of both abnormal indoor unit and its outdoor unit in same refrigerant system. Forced outdoor unit stop cannot be released by remote controller OFF. **NOTE)** **Above-mentioned ①~③ and ④~⑦ are detected independently.**	① Malfunction of drain pump ② Defective drain Clogged drain pump Clogged drain pipe ③ Defective moving part of float switch Foreign matter on the moving part of float switch(ex. sludge etc.) ④ Defective float switch ⑤ Defective indoor controller board Defective driving circuit of drain pump Defective input circuit of float switch ⑥ Both of above mentioned ①~⑤ and the indoor linear expansion valve full-closed failure (leakage) happens synchronistically. (Note) Address/Attribute displayed on the remote controller shows the indoor unit which is cause of trouble.	① Check if drain-up machine works. ② Check drain function. ③ Check moving part of float switch. ④ Check the value of resistance with the float switch ON/OFF. ⑤ Change the indoor controller board. ⑥ Check whether the indoor linear expansion valve leaks or not.
2503	**Drain sensor (THd, DS)** When the drain sensor detects short/open while the operation.	① Connector (CN31) contact failure (insertion failure) ② Thermistor wiring disconnection or half disconnection ③ Thermistor defective ④ Indoor controller board (detecting circuit) failure	① Check whether the indoor controller board connector (CN31) is disconnected or not. ② Check whether the thermistor wiring is disconnected or not. ③ Check the resistance of thermistor. ④ If abnormality is not found in the method of the above-mentioned from ① to ③, it is defective of the indoor controller board.
4100	**Compressor overcurrent interruption (When compressor locked)** Abnormal if overcurrent of DC bus or compressor is detected within 30 seconds after compressor starts operating. Over current : 27.5A	① Stop valve is closed. ② Decrease of power supply voltage ③ Looseness, disconnection or converse of compressor wiring connection ④ Defective compressor ⑤ Defective outdoor power board	① Open stop valve. ② Check facility of power supply. ③ Correct the wiring (U·V·W phase) to compressor. ④ Check compressor. ⑤ Replace outdoor power circuit board.

Display	Abnormal point and detecting method	Causes	Check points
4220	**Overvoltage or voltage shortage** Abnormal if any of followings are detected during compressor operation; • Decrease of DC bus voltage to 310V • Instantaneous decrease of DC bus voltage to 200V. • Increase of DC bus voltage to 400V. • Decrease of input current of outdoor unit to 0.5A only if operation frequency is more than or equal to 40Hz or compressor current is more than or equal to 5A.	① Decrease of power supply voltage ② Disconnection of compressor wiring ③ Defective 52C ④ Defective ACT module ⑤ Disconnection or loose connection of CN5 on the outdoor power circuit board ⑥ Defective 52C drive circuit of outdoor power circuit board ⑦ Disconnection or loose connection of CN2 on the outdoor power circuit board ⑧ Defective ACT module drive circuit of outdoor controller circuit board ⑨ Disconnection or loose connection of CNAF	① Check the facility of power supply. ② Correct the wiring (U·V·W phase) to compressor. (Outdoor power circuit board). ③ P48NHMU(1)(-BS) : Replace 52C. P36NHMU/P48NHMU2 (-BS) : Replace noise filter circuit board (Including 52C) ④ Replace ACT module. (Refer to 9-9. Test point ; the item of ACTM) ⑤ Check CN5 wiring on the outdoor power circuit board. ⑥ Replace outdoor power circuit board. ⑦ Check CN2 wiring on the outdoor power circuit board. ⑧ Replace outdoor power circuit board. ⑨ Check CNAF wiring. ⑩ The 4220 error history can be confirmed with SW1 No.189. 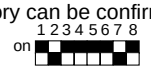 (Refer to 9-9. Test point ; the item of ACTM)

Notes in case of 4220 error (Over voltage or voltage shortage)

In PUMY models, bus voltage is controlled using ACTM. If ACTM is failed, bus voltage becomes uncontrollable and stops abnormally. To check the normality of operation, see DC bus voltage SW1 9-10. No.45, or determine DC bus voltage of the both sides of condenser C510 or CNDC connector which is on Multi controller board using a tester.

1. Check point

Self check switch	No.45 SW1 : 10110100
Tester check	The voltage (DC) of the condenser C510 or CNDC connector which is on Multi controller board

2. Check the voltage

ACTM condition	DC bus voltage
Normal	Target voltage 340-350V (DC)
Failure / no operation	Less than 310V (DC) or over 400V (DC)

Caution : Determine the voltage for 10 seconds after the compressor has operated. ACTM does not operate when the compressor is stopping (Including constraint electric continuity) and for 10 seconds after the compressor start to operate.
When bus voltage is abnormal, see the table above (1.Check point) and check such as input voltage, wiring, 52C relay.
To check ACTM itsef, see 9-9. Test point ; the item of ACTM.
In case of ACTM failure, also check if there is the breaking of a wire in rush current protect resistor.
As for PUMY-P48NHMU(1)(-BS), rush current protect resistor is resistor RS (not mounted on the board). For PUMY-P36NHMU, P48NHMU2, resistor RS1 is mounted on noise filter circuit board.

4230	**Temperature of heatsink** Abnormal if heat sink thermistor(TH8) detects temperature indicated below 85℃ [185°F]	① The outdoor fan motor is locked. ② Failure of outdoor fan motor ③ Airflow path is clogged. ④ Rise of ambient temperature ⑤ Defective thermistor ⑥ Defective input circuit of outdoor power circuit board ⑦ Failure of outdoor fan drive circuit	①② Check outdoor fan. ③ Check air flow path for cooling. ④ Check if there is something which causes temperature rise around outdoor unit. (Upper limit of ambient temperature is 46℃ [115°F].) Turn off power, and on again to check if 4230 is displayed within 30 minutes. ⑤ Check thermistor <TH8> temperature by micro computer. ⑥ Replace outdoor power circuit board. ⑦ Replace outdoor controller circuit board.
4250	**(1) Power module** Check abnormality by driving power module in case overcurrent is detected.	① Outdoor stop valve is closed. ② Decrease of power supply voltage ③ Looseness, disconnection or converse of compressor wiring connection ④ Defective compressor ⑤ Defective outdoor power circuit board	① Open stop valve. ② Check facility of power supply. ③ Correct the wiring (U·V·W phase) to compressor. (Outdoor power circuit board). ④ Check compressor. ⑤ Replace outdoor power circuit board.

Continued on the next page.

Display	Abnormal point and detecting method	Causes	Check points
4250	**(2) Compressor overcurrent interruption** Abnormal if overcurrent DC bus or compressor is detected after compressor starts operating for 30 seconds. Over current : 27.5A	① Stop valve of outdoor unit is closed. ② Decrease of power supply voltage ③ Looseness, disconnection or converse of compressor wiring connection ④ Defective fan of indoor/outdoor units ⑤ Short cycle of indoor/outdoor units ⑥ Defective input circuit of outdoor controller board ⑦ Defective compressor	① Open stop valve. ② Check facility of power supply. ③ Correct the wiring (U·V·W phase) to compressor. (Outdoor power circuit board) ④ Check indoor/outdoor fan. ⑤ Solve short cycle. ⑥ Replace outdoor controller circuit board. ⑦ Check compressor ※ Before the replacement of the outdoor controller circuit board, disconnect the wiring to compressor from the outdoor power circuit board and check the output voltage among phases, U, V, W, during test run (SW7-1 ON). No defect on board if voltage among phases (U-V, V-W and W-U) is same. Make sure to perform the voltage check with same performing frequency.
4400	**Outdoor fan motor** Abnormal if rotational frequency of the fan motor is not detected during DC fan motor operation. Fan motor rotational frequency is abnormal if; • 100 rpm or below detected continuously for 15 seconds at 20: or more outside air temperature • 50 rpm or below or 1500 rpm or more detected continuously for 1 minute.	① Failure in the operation of the DC fan motor ② Failure in the outdoor circuit controller board	① Check or replace the DC fan motor. ② Check the voltage of the outdoor circuit controller board during operation. ③ Replace the outdoor circuit contrlooer board. (when the failure is still indicated even after performing the remedy 1 above.)
5101	**Room temperature thermistor (TH21)** When controller detects short (high temp.)/open (low temp.) in thermistor during the operation, the operation stops and the operation changes to protect mode of restarting in 3minutes. If the thermistor does not recover in 3minutes, the operation stops due to detecting abnormality. In this time, <5101> is displayed. Then, if the thermistor recover in 3minutes, it operates normally. Short: Detected 90℃ [194°F] or more Open: Detected –40℃ [-40°F] or less	① Connector (CN20) contact failure ② Thermistor wiring disconnection or half disconnection ③ Thermistor failure ④ Detecting circuit failure in the indoor controller board	① Check whether the connector (CN20) in the indoor controller board is connected or not. ② Check whether the thermistor wiring is disconnected or not. ③ Check the resistance of thermistor; 0℃ [32°F]····· 15kΩ 10℃ [50°F]····· 9.6kΩ 20℃ [68°F]····· 6.3kΩ 30℃ [86°F]····· 4.3kΩ 40℃ [104°F]··· 3.0kΩ ④ When there is no problem in above mentioned ①②③, replace the indoor controller board.
	Discharge temperature thermistor (TH4) ① When controller detects short/open in thermistor during the operation, the outdoor unit stops once and restarts operation in 3minutes. When the detected temperature is normal at just before of restarting, the outdoor unit restarts. ② When controller detects short/open in thermistor at just before of restarting, the unit stops due to detecting abnormality. In this time, <5101> is displayed. ③ For 10 minutes after starting compressor, for defrosting or for 3minutes after recover of defrosting, above-mentioned short/open are not detected. Short: 216℃ [421°F] or more (1kΩ) Open: 0℃ [32°F] or less (700kΩ) Note) When outer temperature thermistor (TH7) is 5℃ [41°F] or less on cooling, open detecting is not determined as abnormality.	① Connector (TH4) contact failure ② Thermistor wiring disconnection or half disconnection ③ Thermistor failure ④ Multi controller board input circuit failure	① Check whether the connector (TH4) in the multi controller board is connected or not. ② Check whether the thermistor wiring is disconnected or not. ③ Check the resistance of thermistor; When the resistance is not below value, replace the thermistor. 0℃ [32°F]·····about 700kΩ 10℃ [50°F]·····about 410kΩ 20℃ [68°F]·····about 250kΩ 30℃ [86°F]·····about 160kΩ 40℃ [104°F]···about 104kΩ ④ Set the SW1 to on When the temperature in multi controller board is not an actual temperature, replace the multi controller board. 1.3: Open 219.4: Short

Display	Abnormal point and detecting method	Causes	Check points
5102	**Liquid pipe temperature thermistor (TH22)** When the thermistor detects short/open during the operation, the operation stops and the operation changes to protect mode of restarting in 3minutes. If the thermistor does not recover in 3minutes, the operation stops due to detecting abnormality. In this time, <5102> is displayed. Then, if the thermistor recover in 3minutes, it operates normally. Short: Detected 90℃ [194°F] or more Open: Detected -40℃ [-40°F] or less	① Connector (CN21 or CN44) contact failure ② Thermistor wiring disconnection or half disconnection ③ Thermistor failure ④ Detecting circuit failure in the indoor controller board	① Check whether the connector (CN21 or CN44) in the indoor controller board is connected or not. ② Check whether the thermistor wiring is disconnected or not. ③ Check the resistance of thermistor; 0℃ [32°F] ·····15kΩ 10℃ [50°F] ·····9.6kΩ 20℃ [68°F] ·····6.3kΩ 30℃ [86°F] ·····4.3kΩ 40℃ [104°F] ···3.0kΩ ④ When there is no problem in above mentioned ①②③, replace the indoor controller board.
	Low pressure saturation temperature thermistor (TH6) ① When controller detects short/open in thermistor during the operation, the outdoor unit stops once and restarts operation in 3minutes. When the detected temperature is normal at just before of restarting, the outdoor unit restarts. ② When controller detects short/open in thermistor at just before of restarting, the unit stops due to detecting abnormality. In this time, <5102> is displayed. ③ For 10 minutes after starting compressor, heating mode, above-mentioned short/open are not detected. Short: 90℃ [194°F] or more Open: -40℃ [-40°F] or less	① Connector (TH6) contact failure ② Thermistor wiring disconnection or half disconnection ③ Thermistor failure ④ Multi controller board input circuit failure	① Check whether the connector (TH6) in the multi controller board is connected or not. ② Check whether the thermistor wiring is disconnected or not. ③ Check the resistance of thermistor; 0℃ [32°F]·····15kΩ 10℃ [50°F]·····9.6kΩ 20℃ [68°F]·····6.3kΩ 30℃ [86°F]·····4.3kΩ 40℃ [104°F]···3.0kΩ ④ Set the SW1 to 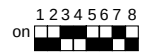 When the temperature in multi controller board is not an actual temperature, replace the multi controller board. -42.5: Open 91.9: Short

Display	Abnormal point and detecting method	Causes	Check points
5103	**Gas pipe temperature thermistor (TH23)** When the thermistor detects short/open after 3minutes-continuous thermo ON during cooling or dry operation, the operation stops and the operation changes to protect mode of restarting in 3minutes. If the thermistor does not recover in 3minutes, the the operation stops due to detecting abnormality. In this time, <5103> is displayed. Then, if the thermistor recover in 3minutes, it operates normally. Short: Detected 90℃ [194°F] or more Open: Detected -40℃ [-40°F] or less	①Connector (CN29 or CN44) contact failure ② Thermistor wiring disconnection or half disconnection ③ Thermistor failure ④ Detecting circuit failure in the indoor controller board	① Check whether the connector (CN29 or CN44) in the indoor controller board is connected or not. ② Check whether the thermistor wiring is disconnected or not. ③ Check the resistance of thermistor; 0℃ [32°F]·····15kΩ 10℃ [50°F]·····9.6kΩ 20℃ [68°F]·····6.3kΩ 30℃ [86°F]·····4.3kΩ 40℃ [104°F]···3.0kΩ ④ When there is no problem in above mentioned ①②③, replace the indoor controller board.
5105	**Pipe temperature / judging defrost thermistor (TH3)** ① When controller detects short/open in thermistor during the operation, the outdoor unit stops once and restarts operation in 3minutes. When the detected temperature is normal at just before of restarting, the outdoor unit restarts. ② When controller detects short/open in thermistor at just before of restarting, the unit stops due to detecting abnormality. In this time, <5105> is displayed. ③ For 10 minutes after starting compressor, for defrosting or for 3minutes after recover of defrosting, above-mentioned short/open are not detected. Short: 88℃ [190°F] or more (0.4kΩ) Open: -39℃ [-38°F] or less (115kΩ)	① Connector (TH3) contact failure ② Thermistor wiring disconnection or half disconnection ③ Thermistor failure ④ Multi controller board input circuit failure	① Check whether the connector (TH3) in the multi controller board is connected or not. ② Check whether the thermistor wiring is disconnected or not. ③ Check the resistance of thermistor; When the resistance is not below value, replace the thermistor. 0℃ [32°F]·····15kΩ 10℃ [50°F]·····9.6kΩ 20℃ [68°F]·····6.3kΩ 30℃ [86°F]·····4.3kΩ 40℃ [104°F]···3.0kΩ ④ Set the SW1 to 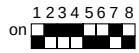 When the temperature in multi controller board is not an actual temperature, replace the multi controller board. -42.5: Open 91.9: Short

Display	Abnormal point and detecting method	Causes	Check points
5106	**Outdoor temperature thermistor (TH7)** ① When controller detects short/open in thermistor during the operation, the outdoor unit stops once and restarts operation in 3minutes. When the detected temperature is normal at just before of restarting, the outdoor unit restarts. ② When controller detects short/open in thermistor at just before of restarting, the unit stops due to detecting abnormality. In this time, <5106> is displayed. ③ For 10 minutes after starting compressor, for defrosting or for 3minutes after recover of defrosting, above-mentioned short/open are not detected. Short: 90℃ [194°F] or more Open: -40℃ [-40°F] or less	① Connector (TH7) contact failure ② Thermistor wiring disconnection or half disconnection ③ Thermistor failure ④ Multi controller board input circuit failure	① Check whether the connector (TH7) in the multi controller board is connected or not. ② Check whether the thermistor wiring is disconnected or not. ③ Check the resistance of thermistor; When the resistance is not below value, replace the thermistor. 0℃ [32°F]·····15kΩ 10℃ [50°F]·····9.6kΩ 20℃ [68°F]·····6.3kΩ 30℃ [86°F]·····4.3kΩ 40℃ [104°F]···3.0kΩ ④ Set the SW1 to 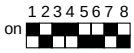 When the temperature in multi controller board is not an actual temperature, replace the multi controller board. -42.5: Open 91.9: Short
5110	**Heatsink temperature thermistor (TH8)** (internal thermistor of power module) ① When controller detects short/open in thermistor during the operation, the outdoor unit stops once and restarts operation in 3minutes. When the detected temperature is normal at just before of restarting, the outdoor unit restarts. ② When controller detects short/open in thermistor at just before of restarting, the unit stops due to detecting abnormality. In this time, <5110> is displayed. ③ For 10 minutes after starting compressor, for defrosting or for 3minutes after recover of defrosting, above-mentioned short/open are not detected. Short:102℃ [216°F] or more Open: -27℃ [-17°F] or less	①Connector (TH8) contact failure. ② Thermistor wiring disconnection or half disconnection. ③ Thermistor failure ④ Power board input circuit failure ⑤ Wrong setting of model setting switch (SW4)	① Check whether the connector (TH8) in the power circuit board. ② Check whether the thermistor wiring is disconnected or not. ③ Check the resistance of thermistor; When the resistance is not below value, replace the thermistor. 0℃ [32°F]·····180kΩ 10℃ [50°F]·····105kΩ 20℃ [68°F]·····63kΩ 30℃ [86°F]·····39kΩ 40℃ [104°F]···25kΩ ④ Set the SW1 to 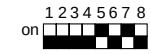 When the temperature in multi controller board is not an actual temperature, replace the power board. -81.0: Open 999.9: Short ⑤ See 9-5. SWITCH FUNCTION TABLE ; SW4 model switching, then set correctly. *When SW4-1 is on, it will be 5110 error. Set correctly.

Display	Abnormal point and detecting method	Causes	Check points
5201	**Pressure sensor (63HS)**		
	① When detected pressure in high-pressure sensor is 1 MPa [145PSIG] or less during the operation, the compressor stops and restarts operation in 3 minutes.	① High-pressure sensor failure	① Check the high-pressure sensor.
	② When the detected pressure is 1 MPa [145PSIG] or less at just before of restarting, the compressor stops due to detecting abnormality. In this time, <5201> is displayed.	② Internal pressure decrease by gas leakage	② Check the internal pressure.
	③ For 3minutes after starting compressor, for defrosting or for 3 minutes after recover of defrosting, abnormality is not determined as abnormality.	③ Connector contact failure, disconnection	③ Check the high-pressure sensor.
		④ Multi controller board input circuit failure	④ Check the high-pressure sensor.
5300	**Current sensor error** Abnormal if current sensor detects –1.5A to 1.5A during compressor operation. (This error is ignored in case of SW7-1 ON.)	① Disconnection of compressor wiring ② Defective circuit of current sensor on outdoor power circuit board	① Correct the wiring (U·V·W phase) to compressor. (Outdoor power circuit board). ② Replace outdoor power circuit board.
	Abnormal if input current exceeds 38A or 34A continuously 10 seconds. (Current sensor on noise filter board detects input current.)	① Decrease of power supply voltage	① Check the facility of power supply.
5701	**Disconnected float switch connector** Abnormal if detected that the float switch connector is disconnected(open) during operation	1) Disconnection of connecor(CN4F)	① Check the disconnetion of connector(CN4F) on the indoor controller board.
6600	**Duplex address error** Detected error when transmission of unit with the same address is confirmed, Note) Address/Attribute displayed on the remote controller shows the controller detecting abnormality.	① There are 2 units or more with the same address among the outdoor unit or indoor unit or lossnay controller, remote controller.	① Look for the unit, which is source of abnormality with the same address. When the same address is found, correct the address and turn off power supply of outdoor unit, indoor unit, and lossnay for 2 minutes or more as the same time. Then, turn on power supply.
		② When noise has occurred in the transmission signal, and the signal has changed.	② Check the transmitted wave and the noise on the transmission line.
6602	**Transmission processor H/W error** " 1 " shows on the transmission line though the transmission processor transmitted " 0". Note) Address/Attribute displayed on the remote controller shows the controller detecting abnormality.	① When the wiring for either of the indoor unit, the outdoor unit or lossnay transmission line is constructed or polarity is changed with the power supply turned on, the transmission waves change in case that the transmission data collides mutually. It causes to detect error.	① When the transmission line is constructed with the current flowed, turn off power supply of outdoor unit, indoor unit and lossnay for 2 minutes or more as the same time. Then, turn on power supply.
		② Transmission processor circuit failure ③ When the transmission data has changed by the noise.	② Check the transmitted wave and the noise on the transmission line.

Display	Abnormal point and detecting method	Causes	Check points
6603	**Transmission bus busy error** ① Over error by collision Abnormality when the state, which cannot be transmitted by collision of transmission, is consecutive for 8 to 10minutes. ② The state that data cannot to be output to the transmission line by the noise happens for 8 to 10minutes consecutively. Note) Address/Attribute displayed on the remote controller shows the controller detecting abnormality.	① The transmission processor cannot be transmitted since a short cycle voltage of the noise etc. mixes on the transmission line consecutively. ② The transmission volume increases and cannot be transmitted since the wiring method is mistaken and the routing technique to the terminal board (TB3) for the transmission line of the outdoor unit and the terminal board (TB7) for centralized control cannot be transmitted. ③ The share becomes high since the data exists together to other transmitted data by a defective repeater (function which connects and intercepts the transmission of controlling system and centralized control system), and it causes abnormal detection.	① Check whether the transmission line of the indoor unit, fresh master, lossnay and remote controller is connected to the outdoor unit terminal board (TB7) for centralized controller or not. ② Check whether the transmission line with the other refrigerant system of the indoor unit and lossnay is connected to the outdoor unit terminal board (TB3) for transmission or not. ③ Check whether the outdoor unit terminal board for transmission line (TB3) and for centralized controller (TB7) are connected or not. ④ Check the transmitted wave and the noise on the transmission line.
6606	**Signal communication error with transmission processor** Signal communication error between unit processor and transmission processor Note) Address/Attribute displayed on the remote controller shows the controller detecting abnormality.	①Tha data of the unit/transmission processor was not normally transmitted due to accidental disturbance such as noise and lightening surge. ②The address transmission from the unit processor was not normally transmitted by the hardware of transmission processor defective.	Turn off power supply of outdoor unit, indoor unit, and lossnay for 2minutes or more at the same time. Then, turn on power supply. It normally recovers from the malfunction that happens by chance. When same abnormality occurs again, it is defective of the controller.

Display	Abnormal point and detecting method	Causes	Check points
6607	**No ACK (Acknowledgement)** ① Abnormality which controller of the sending side detects when there is no answer (ACK) from other side though data was transmitted once. It is detected 6 times every 30seconds continuously. Note) Address/Attribute displayed on the remote controller shows the controller, which did not send back replay (ACK).	① Factor that does not related to origin Since the address switch was changed with the current passed, the unit in the last address does not exist. ② Decline of transmission voltage and signal by transmission line tolerance over · The furthest point···200m · Remote controller line···(12m) (Refer to 7-3.) ③ Decline of transmission line voltage and signal by unmatched kind of line. · Shield line-CVVS,CPEVS Line diameter···1.25 ㎟ or more ④ Decline of transmission line voltage and signal by a number of over-connected units. ⑤ Miss operation of origin controller, which happens by chance. ⑥ Original controller defective	① Turn off power supply of outdoor unit, indoor unit fresh master and lossnay for 2 minutes or more at the same time. Then, turn on power supply. It recovers normally at the malfunction that happens by chance. ② Check the address switch in the address, which occurs abnormality. ③ Check whether the transmission line is connected / loosen or not at origin. (Terminal board or connector) ④ Check whether the transmission line tolerance is over or not. ⑤ Check whether the kind of transmission line is mistaken or not. When there is any trouble from above ①-⑤, turn off power supply of outdoor unit, indoor unit and lossnay for 2minutes or more at the same time. Then, turn on power supply. ⇒ When there is not any trouble in single refrigerant system (1 outdoor unit) from above ①-⑤, controller defective in displayed address and attribute. ⇒ When there is not any trouble in different refrigerant system (2 outdoor unit or more) from above ①-⑤, determine it after ⑥. ⑥ When the address, which should not exist, is an origin, since there is the indoor unit which memorizes the address data, cancel the unnecessary address data by the manual setting function of remote controller. However, they are limited to the system, which sets the group between different refrigerant systems, or which fresh master /lossnay are connected. When there is not any trouble from above ①-⑥, replace the displayed address/attribute controller board. In this time, when the error does not recover to normal, the outdoor unit multi controller board (repeater circuit) defective is expected. Check the recovery by replacing the multi controller board one by one.
	① When the cause of displayed address and attribute is on the outdoor unit side (The indoor unit detects when there is no reply (ACK) on transmitting from the indoor unit to the outdoor unit.)	① Contact failure of outdoor unit or indoor unit transmission line ② Indoor unit transmission connector (CN2M) disconnection ③ Sending/receiving signal circuit failure in the indoor/outdoor unit	
	② When the cause of displayed address and attribute is on the indoor unit side (The remote controller detects when there is no reply (ACK) on transmitting from the remote controller to the indoor unit.)	① When operating with multi refrigerant system indoor units, the remote controller transmits the signal to the indoor unit after the other refrigerant system outdoor unit is turned off or turned on again in 2minutes, and detects abnormality. ② Contact failure of remote controller or indoor unit transmission line. ③ Indoor unit transmission connector (CN2M) disconnection. ④ Sending/receiving signal circuit failure in the indoor unit or remote controller.	

continued on the next page.

Display	Abnormal point and detecting method	Causes	Check points
6607	③When the cause of displayed address and attribute is on the remote controller side (The indoor unit detects when there is no reply (ACK) on transmitting from the indoor unit to the remote controller unit.)	①When operating with multi refrigerant system indoor units, the indoor units transmits the signal to the remote controller after the other refrigerant system outdoor unit is turned off or turned on again in 2minutes, and detects abnormality. ②Contact failure of remote controller or indoor unit transmission line ③Indoor unit transmission connector (CN2M) disconnection ④Sending/receiving signal circuit failure in the indoor unit or remote controller	
	④When the cause of displayed address and attribute is on the fresh master side (The indoor unit detects when there is no reply (ACK) on transmitting from the indoor unit to the fresh master.)	①When synchronized operating with other refrigerant system fresh master, the indoor units transmits the signal to the fresh master after the fresh master and same refrigerant system outdoor unit is turned off or turned on again in 2minutes, and detects abnormality. ②Contact failure of fresh master or indoor unit transmission line ③ Indoor unit or fresh master transmission connector (CN2M) disconnection ④ Sending/receiving signal circuit failure in the indoor unit or fresh master	
	⑤When the cause of displayed address and attribute is on the lossnay side (The indoor unit detects when there is no reply (ACK) on transmitting from the indoor unit to the lossnay.)	① When the lossnay power supply is Off, the indoor unit detects abnormality at signal transmitting to the lossnay. ② When synchronized operating with other refrigerant system lossnay, the indoor units transmits the signal to the lossnay after the lossnay and same refrigerant system outdoor unit is turned off or turned on again in 2 minutes, and detects abnormality ③ Contact failure of lossnay or indoor unit transmission line ④ Indoor unit transmission connector (CN2M) disconnection ⑤ Sending/receiving signal circuit failure in the indoor unit or lossnay	
	⑥ When the controller of displayed address and attribute is not recognized	①Since the address switch was changed with the current passed, the unit in the last address does not exist. ② Since the fresh master/lossnay address are changed after synchronized setting of fresh master / lossnay by the remote controller, abnormality is detected at transmitting from the indoor unit.	

Display	Abnormal point and detecting method	Causes	Check points
6608	**No response** Though there was a replay (ACK) of having received signal from the other side, it is the abnormality when the response command does not return. The sending side detects the abnormality continuously six times every 30 seconds. Note) Address/Attribute displayed on the remote controller shows the controller, which did not response.	① Transmission repeats the failure by the noise etc. ② Decline of transmission voltage and signal by transmission line tolerance over · The furthest point···200m [656ft] · Remote controller line···(12m [39ft]) (Refer to 8-3.) ③ Decline of transmission line voltage and signal by unmatched kind of line · Shield wire-CVVS,CPEVS Wire diameter···1.25㎟ [AWG16] or more ④ Mis-operation of origin controller, which happens by chance	① Check the transmission wave and noise on the transmission line. ② Turn off power supply of outdoor unit, indoor unit and lossnay for 2minutes or more at the same time. Then, turn on power supply again. It recovers normally at the malfunction that happens by chance. When same abnormality occurs again, it is defective of displayed address and attribute.
6831 6834	**Signal reception(Remote controller)** Following symptoms are regarded as abnormality. 1) When the remote controller cannot receive the signal from indoor controller normally even once for 3 minutes 2) When the remote controller cannot receive the signal even once for 2 minutes	① Defect of the transmission and reception circuit of the remote controller. ② Defect of the transmission and reception circuit of the indoor controller board ③ Noise occurs on the transmission line of the remote controller ④ All remote controllers are set as sub-remote controller.	①~③ Perform a check of the remote controller. According to the results, perform the following disposals. • When "RC OK" is displayed The remote controller is normal. Turn off the power supply and turn it on again. If "HO" or "PLEASE WAIT" is displayed for 4 minutes or more, replace the indoor controller board. • When "RC NG" is displayed Replace the remote controller. • When "RC 6832 or 6833" or "ERC 00-66" is displayed These displays may be due to noise, etc. ④ Set one remote controller to main remote controller and the other to sub-remote controller.
6832 6833	**Signal transmission(Remote controller)** Following symptoms are regarded as abnormality. 1) When sub-remote controller cannot transmit the signal to the transmission path for 6 minutes 2) When the remote controller cannot finish transmitting the signal for 30 times on end	① Defect of the transmission and reception circuit of the remote controller ② Noise occurs on the transmission line of the remote controller ③ There are 2 main remote controllers.	
7100	**Total capacity** When connected total models of the indoor units exceed the specified level (130% of the outdoor unit models), error code <7100> is displayed.	① Connecting total models of the indoor unit exceed the specified level. · PUMY-P36NHMU (~ code 26) · PUMY-P48NHMU(1) (~ code 34) · PUMY-P48NHMU2 (~ code 35)	① Check the total models of connected indoor unit. ② Check the model code registration switch (indoor controller board SW2) of connected indoor unit.
		② There is a mistake in the registration of model name code of the outdoor unit.	Check the model code registration switch (outdoor multi controller board SW4) of the outdoor unit.

Display	Abnormal point and detecting method	Causes	Check points
7101	**Capacity code error** When the connected indoor unit models cannot be connected, <7101> is displayed.	The indoor unit models is not possible to connect. The indoor unit of 06-54 (code 4-28) is possible to connect.	① Check the model code registration switch (indoor controller board SW2) in the connected indoor unit. ② The outdoor unit SW1 operation can check model code of the connected indoor units. Code of indoor unit No.1 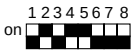 Code of indoor unit No.2 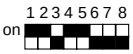 Code of indoor unit No.3 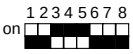 Code of indoor unit No.4 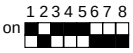 Code of indoor unit No.5 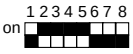 Code of indoor unit No.6 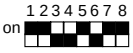 Code of indoor unit No.7 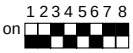 Code of indoor unit No.8 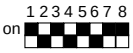
7102	**Number of connecting unit over** When the connecting unit exceeds a number of limitations, error code <7102> is displayed. (Even if the indoor unit is not connected, becomes <7102> is display.)	Connecting unit exceeds a number of limitations. It is assumed abnormality excluding the following cases; ① The indoor unit can be totally connected up to 6(P36)/8(P48) units. The indoor unit can be connected up to 8 units ② Ventilation unit connecting is only 1unit.	Check whether the connecting unit exceeds a number of limitations or not.
7105	**Address setting error** Address setting of the outdoor unit is wrong.	Addresses miss setting of the outdoor unit. The outdoor unit is not set in 000 or in the range of 51-100.	Check the address setting of the outdoor unit. The address should be set in 000 or 51-100. When the setting is out of the range, reset it, turn off power supply of the outdoor unit, indoor unit and lossnay for 2minutes or more at the same time, and turn on power supply again.
7111	**Remote controller sensor** In the case of network remote controller, it is an abnormality when incapable response returns from the net work remote controller during the operation.	When an old type remote controller for M-NET is used, and the remote controller sensor is specified (SW1-1 is ON).	Replace the remote controller to net work remote controller.
0403	**Serial communication error** Abnormal if serial communication between outdoor multi board and outdoor power board is defective.	① Breaking of wire or contact failure of connector CN2 ② Breaking of wire or contact failure of connector CN4 ③ Defective communication circuit of outdoor power board ④ Defective communication circuit of outdoor multi board for power board	①② Check connection of each connector CN2, CN4. ③ Replace outdoor power board. ④ Replace outdoor multi board.

9-2. REMOTE CONTROLLER DIAGNOSIS

· MA remote controller is equipped with the diagnosis function

If the air conditioner cannot be operated from the remote controller, diagnose the remote controller as explained below.

① First, check that the power-on indicator is lit.
If the correct voltage (DC12 V) is not supplied to the remote controller, the indicator will not light.
If this occurs, check the remote controller's wiring and the indoor unit.

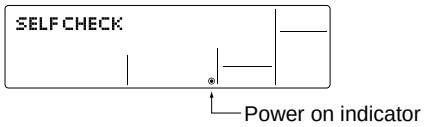

② Switch to the remote controller self-diagnosis mode.
Press the (CHECK) button for 5 seconds or more. The display content will change as shown below.

Press the (FILTER) button to start self-diagnosis.

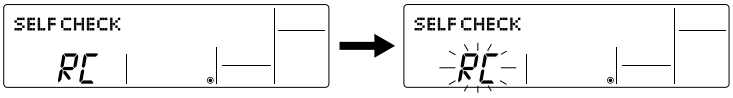

③ Remote controller self-diagnosis result

[When the remote controller is functioning correctly]

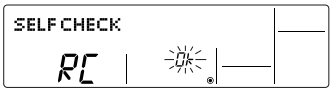

Check for other possible causes, as there is no problem with the remote controller.

[When the remote controller malfunctions]
(Error display 1) "NG" blinks. → The remote controller's transmitting-receiving circuit is defective.

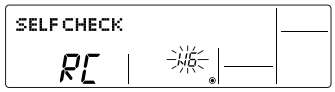

The remote controller must be replaced with a new one.

[Where the remote controller is not defective, but cannot be operated.]
(Error display 2) [E3], [6833] or [6832] blinks. → Transmission is not possible.

There might be noise or interference on the transmission path, or the indoor unit or other remote controllers are defective. Check the transmission path and other controllers.

(Error display 3) "ERC" and the number of data errors are displayed.
→ Data error has occurred.

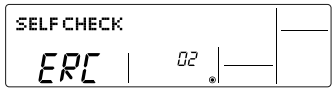

The number of data errors is the difference between the number of bits sent from the remote controller and the number actually transmitted through the transmission path. If such a problem is occurring, the transmitted data is affected by noise, etc. Check the transmission path.

☞ When the number of data errors is "02":
Transmission data from remote controller
Transmission data on transmission path

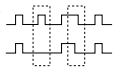

④ To cancel remote controller diagnosis

Press the (CHECK) button for 5 seconds or more. Remote controller diagnosis will be cancelled, "PLEASE WAIT" and operation lamp will blink. After approximately 30 seconds, the state in effect before the diagnosis will be restored.

9-3. REMOTE CONTROLLER TROUBLE

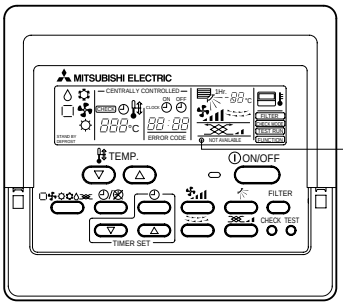

" ◉ " indicator: Appears when current is carried.

(M-NET Remote controller)

(1) For M-NET remote controller systems

Symptom or inspection code	Cause	Inspection method and solution
Though the content of operation is displayed on the remote controller, some indoor units do not operate.	• The power supply of the indoor unit is not on. • The address of the indoor units in same group or the remote controller is not set correctly. • The group setting between outdoor units is not registered to the remote controller. • The fuse on the indoor unit controller board is blown.	• Check the part where the abnormality occurs. ① The entire system ② In the entire refrigerant system ③ In same group only ④ 1 indoor unit only <In case of the entire system or in the entire refrigerant system> • Check the self-diagnosis LED of the outdoor unit. • Check the items shown in the left that are related to the outdoor unit. <In case of in same group only or 1 indoor unit only> • Check the items shown in the left that are related to the indoor unit.
Though the indoor unit operates, the display of the remote controller goes out soon.	• The power supply of the indoor unit is not on. • The fuse on the indoor unit controller board is blown.	
(◉) is not displayed on the remote controller. (M-NET remote controller is not fed.)	• The power supply of the outdoor unit is not on. • The connector of transmission outdoor power board is not connected. • The number of connected indoor unit in the refrigeration system is over the limit or the number of connected remote controller is over the limit. • M-NET remote controller is connected to MA remote controller cable. • The transmission line of the indoor/outdoor unit is shorted or down. • M-NET remote controller cable is shorted or down. • Transmission outdoor power board failure.	
"HO" keeps being displayed or it is displayed periodically. ("HO" is usually displayed about 3 minutes after the power supply of the outdoor unit is on.)	• The power supply for the feeding expansion unit for the transmission line is not on. • The address of the outdoor unit remains "00". • The address of the indoor unit or the remote controller is not set correctly. • MA remote controller is connected to the transmission line of the indoor/outdoor unit.	
The remote controller does not operate though (◉) is displayed.	• The transmission line of the indoor/outdoor unit is connected to TB15. • The transmission line of the indoor/outdoor unit is shorted, down or badly contacted.	

(2) For MA remote controller systems

Symptom or inspection code	Cause	Inspection method and solution
Though the content of operation is displayed on the remote controller, some indoor units do not operate.	• The power supply of the indoor unit is not on. • Wiring between indoor units in same group is not finished. • The indoor unit and Slim model are connected to same group. • The fuse on the indoor unit controller board is blown.	• Check the part where the abnormality occurs. ① The entire system ② In the entire refrigerant system ③ In same group only ④ 1 indoor unit only <In case of the entire system or in the entire refrigerant system> • Check the self-diagnosis LED of the outdoor unit. • Check the items shown in the left that are related to the outdoor unit. <In case of in same group only or 1 indoor unit only> • Check the items shown in the left that are related to the indoor unit.
Though the indoor unit operates, the display of the remote controller goes out soon.	• The power supply of the indoor unit (Master) is not on. • In case of connecting the system controller, the setting of the system controller does not correspond to that of MA remote controller. • The fuse on the indoor unit (Master) controller board is blown.	
(◉) is not displayed on the remote controller. (MA remote controller is not fed.)	The remote controller is not fed until the power supply of both indoor unit and outdoor unit is on and the start-up of both units is finished normally. • The power supply of the indoor unit is not on. • The power supply of the outdoor unit is not on. • The number of connected remote controller is over the limit (Maximum: 2 units) or the number of connected indoor unit that is over the limit (Maximum: 16 units). • The address of the indoor unit is "00" and the address for the outdoor unit is the one other than "00". • The transmission line of the indoor/outdoor unit is connected to TB15. • MA remote controller is connected to the transmission line of the indoor/outdoor unit . • The remote controller cable is shorted or down. • The power supply cable or the transmission line is shorted or down. • The fuse on the indoor unit controller board is blown.	
"PLEASE WAIT" keeps being displayed or it isdisplayed periodically. ("PLEASE WAIT" is usually displayed about 3 minutes after the power supply of the outdoor unit is on.)	• The power supply of the outdoor unit is not on. • The power supply of the feeding expansion unit for the transmission line is not on. • The setting of MA remote controller is not main remote controller, but sub-remote controller. • MA remote controller is connected to the transmission line of the indoor/outdoor unit.	
The remote controller does not operate though (◉) is displayed.	• The power supply of the indoor unit (Master) is not on. • The transmission line of the indoor/outdoor unit is connected to TB15. • The transmission line of the indoor/outdoor unit is shorted, down or badly contacted. •The fuse on the indoor unit controller board is blown.	

9-4. THE FOLLOWING SYMPTOM DO NOT REPRESENT TROUBLE (EMERGENCY)

Symptom	Display of remote controller	CAUSE
Even the cooling (heating) operation selection button is pressed, the indoor unit cannot be operated.	"Cooling (Heating)" blinks	The indoor unit can not cool (heat) if other indoor units are heating (cooling).
The auto vane runs freely.	Normal display	Because of the control operation of auto vane, it may change over to horizontal blow automatically from the downward blow in cooling in cause the downward blow operation has been continued for one hour. At defrosting in heating, hot adjusting and thermostat OFF, it automatically changes over to horizontal blow.
Fan setting changes during heating.	Normal display	Ultra-low speed operation is commenced at thermostat OFF. Light air automatically change over to set value by time or piping temperature at thermostat ON.
Fan stops during heating operation.	"Defrost ☼"	The fan is to stop during defrosting.
Fan does not stop while operation has been stopped.	Light out	Fan is to run for 1 minute after stopping to exhaust residual heat (only in heating).
No setting of fan while start SW has been turned on.	STAND BY ☼	Ultra-low speed operation for 5 minutes after SW ON or until piping temperature becomes 35C. There low speed operate for 2 minutes, and then set notch is commenced. (Hot adjust control)
Indoor unit remote controller shows "HO" or "PLEASE WAIT " indicator for about 2 minutes when turning ON power supply.	"HO" blinks "PLEASE WAIT" blinks	System is being driven. Operate remote controller again after "HO" or "PLEASE WAIT" disappears.
Drain pump does not stop while unit has been stopped.	Light out	After a stop of cooling operation, unit continues to operate drain pump for 3 minutes and then stops it.
Drain pump continues to operate while unit has been stopped.	—	Unit continues to operate drain pump if drainage is generated, even during a stop.

9-5. INTERNAL SWITCH FUNCTION TABLE
PUMY-P48NHMU/NHMU1/NHMU2(-BS) PUMY-P36NHMU(-BS)

	Switch	Step	Function	Operation in Each Switch Setting			Remarks
				ON	OFF	When to Set	
Outdoor unit	SW U1 1s digit SW U2 10ths digit	Rotary switch	SWU2 (10ths digit) SWU1 (1s digit)			Before turning the power on	<Initial settings> SWU2 (10ths digit) SWU1 (1s digit)
	SW1 Digital Display Switching	1~8	ON OFF 1 2 3 4 5 6 7 8			Can be set either during operation or not.	<Initial settings> ON OFF 1 2 3 4 5 6 7 8
	SW2 Function Switching	1	Selects operating system startup	Doesn't start up	Start up	Before turning the power on	<Initial settings> ON OFF 1 2 3 4 5 6
		2	Connection Information Clear Switch	Clear	Do not clear		
		3	Abnormal data clear switch input	Clear abnormal data	Normal	OFF to ON any time after the power is turned on.	
		4	Pump down	Run adjustment mode.	Normal	During compressor running	
		5	Auto change over from Remote controller	Enable	Disable	Before turning the power on.	
		6	—	—	—		
	SW3 Test run	1	ON/ OFF from outdoor unit	ON	OFF	Any time after the power is turned on.	<Initial settings> ON OFF 1 2
		2	Mode setting	Heating	Cooling		
	SW4 Model Switching	1~6	<MODEL SELECT> ※ 3 MODELS / SW4 PUMY-P36NHMU: ON OFF 1 2 3 4 5 6 PUMY-P48NHMU: ON OFF 1 2 3 4 5 6			Before the power is turned on.	<Initial settings> Set for each capacity.
	SW5 Function switching	1	Pressure limitation value change	Enable	Normal	Can be set when off or during operation	<Initial settings> ON OFF 1 2 3 4 5 6 7 8
		2	Change the indoor unit's LEV opening at start	Enable	Normal		
		3	Fixing the indoor units linear expansion valve opening	Fix	Normal		
		4	Fix the operation frequency	Fix	Normal	OFF to ON during compressor running.	
		5	Change the indoor unit's LEV opening at defrost	Enable	Normal	Can be set when off or during operation	
		6	Switching the target sub cool.	Enable	Normal		
		7	During the FAN or COOL mode,and thermo-OFF or OFF in heating operation, set the opening of linear expansion valve on indoor unit ※1	Active	Inactive		
		8	During the FAN or COOL mode,and thermo-OFF in heating operation, set the opening of linear expansion valve on indoor unit ※2	Active	Inactive		

※1 SW5-7 Refrigerant shortage amount is measured during heating operation
(Refrigerant piping is long etc.)

※2 SW5-8 Countermeasure against room temperature rise for indoor unit in FAN, COOL, and thermo-OFF (heating) mode.

※3 (Note : Except PUMY-P48NHMU and PUMY-P48NHMU-BS)
DIP SW4-4 for primary heating control : Set DIP SW4-4 when power is turned off at unit
DIP SW4-4 OFF : Disable primary heating function (Initial setting)
DIP SW4-4 ON : Enable primary heating function

	Switch	Step	Function	Operation in Each Switch Setting			Remarks
				ON	OFF	When to Set	
Outdoor unit	SW6 Function switching	1	—	—	—	—	<Initial settings> ON OFF 1 2 3 4 5 6 7 8
		2	Switch of current limitation reading in a different way	Enable	Normal	Before turning the power on.	
		3	—	—	—	—	
		4	Restriction of maximum frequency	Enable	Normal	Can be set when off or during operation	
		5	Ignore refrigerant filling abnormality	Enable	Normal		
		6	Switching the target discharge pressure (Pdm)	Enable	Normal		
		7	Switching (1) the target evaporation temperature (ETm)	Enable	Normal		
		8	Switching (2) the target evaporation temperature (ETm)	Enable	Normal		
	SW7 Function switching	1	Ignore current sensor abnormality	Enable	Normal	Before turning the power on.	<Initial settings> ON OFF 1 2 3 4 5 6
		2	—	—	—	—	
		3	—	—	—		
		4	—	—	—		
		5	—	—	—		
		6	Forced defrost	Forced defrost	Normal	During compressor running in heating mode.	
	SW8 Function switching	1	Silent mode/ Demand Control Selection (see next page)	Demand Control	Silent mode	Can be set when off or during operation	<Initial settings> ON OFF 1 2
		2	Change of defrosting control	Enable (For high humidity)	Normal		

9-6. OUTDOOR UNIT INPUT/OUTPUT CONNECTOR

● **State (CN51)**

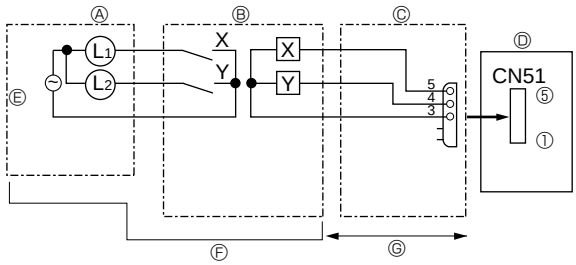

Ⓐ Distant control board
Ⓑ Relay circuit
Ⓒ External output adapter (PAC-SA88HA-E)
Ⓓ Outdoor unit control board
Ⓔ Lamp power supply
Ⓕ Procure locally
Ⓖ Max. 10m[33ft]

L_1 : Error display lamp
L_2 : Compressor operation lamp
X, Y : Relay (Coil standard of 0.9W or less for DC 12V)
X, Y : Relay (DC1mA)

● **Auto change over (CN3N)**

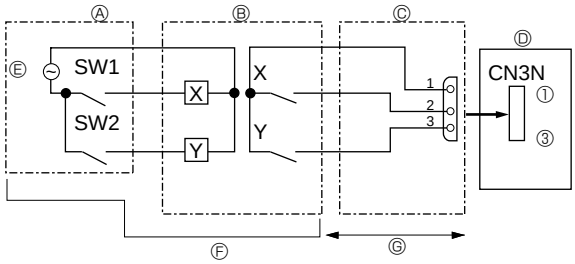

Ⓐ Remote control panel
Ⓑ Relay circuit
Ⓒ External input adapter (PAC-SC36NA)
Ⓓ Outdoor unit control board
Ⓔ Relay power supply
Ⓕ Procure locally
Ⓖ Max. 10m[33ft]

	ON	OFF
SW1	Heating	Cooling
SW2	Validity of SW1	Invalidity of SW1

● **Silent Mode / Demand Control (CN3D)**

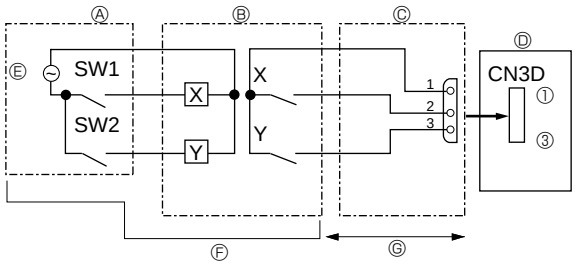

Ⓐ Remote control panel
Ⓑ Relay circuit
Ⓒ External input adapter (PAC-SC36NA)
Ⓓ Outdoor unit control board
Ⓔ Relay power supply
Ⓕ Procure locally
Ⓖ Max. 10m[33ft]

	ON	OFF
SW1	Heating	Cooling
SW2	Validity of SW1	Invalidity of SW1

The silent mode and the demand control are selected by switching the Dip switch 8-1 on outdoor controller board.
It is possible to set it to the following power sonsumption (compared with ratings) by setting SW1,2

	Outdoor controller board DIP SW8-1	SW1	SW2	Function
Silent mode	OFF	ON	—	Silent mode operation
Demand control	ON	OFF	OFF	100% (Normal)
		ON	OFF	75%
		ON	ON	50%
		OFF	ON	0% (Stop)

9-7. HOW TO CHECK THE PARTS

PUMY-P48NHMU **PUMY-P48NHMU$_1$** **PUMY-P48NHMU$_2$**
PUMY-P48NHMU-BS **PUMY-P48NHMU$_1$-BS** **PUMY-P48NHMU$_2$-BS**
PUMY-P36NHMU **PUMY-P36NHMU-BS**

<table>
<tr><th>Parts name</th><th>Check points</th></tr>
<tr><td>Thermistor (TH3)
<Outdoor pipe>
Thermistor (TH4)
<Discharge>
Thermistor (TH6)
<Low pressure saturated temperature>
Thermistor (TH7)
<Outdoor>
Thermistor (TH8)
<Heatsink></td><td>Disconnect the connector then measure the resistance with a tester.
(At the ambient temperature 10℃~30℃ [50°F~86°F])
<table>
<tr><th></th><th>Normal</th><th>Abnormal</th></tr>
<tr><td>TH4</td><td>160kΩ~410kΩ</td><td rowspan="3">Open or short</td></tr>
<tr><td>TH3
TH6
TH7</td><td>4.3kΩ~9.6kΩ</td></tr>
<tr><td>TH8</td><td>39kΩ~105kΩ</td></tr>
</table></td></tr>
<tr><td>Fan motor(MF1,MF2)</td><td>Refer to next page.</td></tr>
<tr><td>Solenoid valve coil
<Four-way valve>
(21S4)</td><td>Measure the resistance between the terminals with a tester.
(At the ambient temperature 20℃ [68°F])
<table>
<tr><th>Normal</th><th>Abnormal</th></tr>
<tr><td>1190 ± 100Ω</td><td>Open or short</td></tr>
</table></td></tr>
<tr><td>Motor for compressor
(MC)
 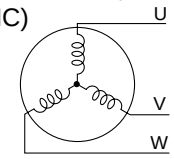
</td><td>Measure the resistance between the terminals with a tester.
(Winding temperature 20℃ [68°F])
<table>
<tr><th>Normal</th><th>Abnormal</th></tr>
<tr><td>0.188Ω</td><td>Open or short</td></tr>
</table></td></tr>
<tr><td>Solenoid valve coil
<Bypass valve>
(SV1)</td><td>Measure the resistance between the terminals with a tester.
(Surrounding temperature 20℃ [68°F])
<table>
<tr><th>Normal</th><th>Abnormal</th></tr>
<tr><td>1183 ± 100Ω</td><td>Open or short</td></tr>
</table></td></tr>
<tr><td>Rush current protect resistor (RS)
only PUMY-P48NHMU$_{(1)}$(-BS)</td><td>Measure the resistance between the terminals with a tester.
<table>
<tr><th>Normal</th><th>Abnormal</th></tr>
<tr><td>5.6Ω ± 5%</td><td>Open* or short</td></tr>
</table>
*In case of open failure, check ACTM with a tester as well.
(Refer to 9-9. Test point ; the item of ACTM)
Note : As for P36NHMU and P48NHMU$_2$(-BS),rush current protect resistor is mounted on noise filter curcuit board. (20Ω±5% / 10W)</td></tr>
<tr><td>52C relay (52C)
 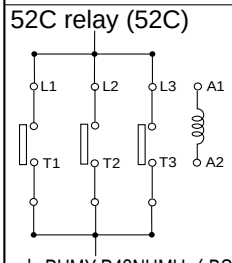

only PUMY-P48NHMU$_{(1)}$(-BS)</td><td>Measure the resistance between the terminals with a tester.
<table>
<tr><th>Normal</th><th>Abnormal</th></tr>
<tr><td>Coil (A1-A2)
Reference value : 1.45kΩ</td><td>Open or short</td></tr>
</table>
Note : As for P36NHMU and P48NHMU$_2$(-BS),52C relay is mounted on noise filter curcuit board. (Reference value : 155Ω (typ))</td></tr>
<tr><td>Reactor (DCL)
 </td><td>Measure the resistance between the terminals with a tester.
<table>
<tr><th>Normal</th><th>Abnormal</th></tr>
<tr><td>Reference value : 0.04Ω</td><td>Open or short*</td></tr>
</table>
*Because the resistor of the reactor is little, it is difficult to determine if it is short or normal with an ordinary tester.</td></tr>
</table>

Check method of DC fan motor (fan motor / outdoor controller circuit board)

① Notes

· High voltage is applied to the connecter (CNF1, 2) for the fan motor. Give attention to the service.

· Do not pull out the connector (CNF1, 2) for the motor with the power supply on.
(It causes trouble of the outdoor controller circuit board and fan motor.)

② Self check

Symptom : The outdoor fan cannot turn around.

Fuse check
Check the fuse (F500) on outdoor controller board.

Did the fuse blow? → Yes → Replace outdoor controller board (MULTI.B.) (C.B) and fan motor (MF1, 2).

↓ No

Wiring contact check
Contact of fan motor connector (CNF1, 2)

↓

Is there contact failure? → Yes → Recover wiring.

↓ No

Power supply check(Remove the connector (CNF1, 2))
Measure the voltage in the outdoor controller circuit board.
TEST POINT ① : V_{DC} (between 1 (+) and 4 (-) of the fan connector): V_{DC} DC280-340V (When ACTM stops), DC350V (When ACTM is operating)
TEST POINT ② : V_{CC} (between 5 (+) and 4 (-) of the fan connector): V_{CC} DC15V

↓

Is the voltage normal? → Yes → Replace the fan motor.

↓ Yes

Check the operation of fan. → OK → END

↓ NG

Replace outdoor controller board.

↓ No

Replace outdoor controller board.

↓

Check the operation. → OK → END

↓ NG

Replace the fan motor.

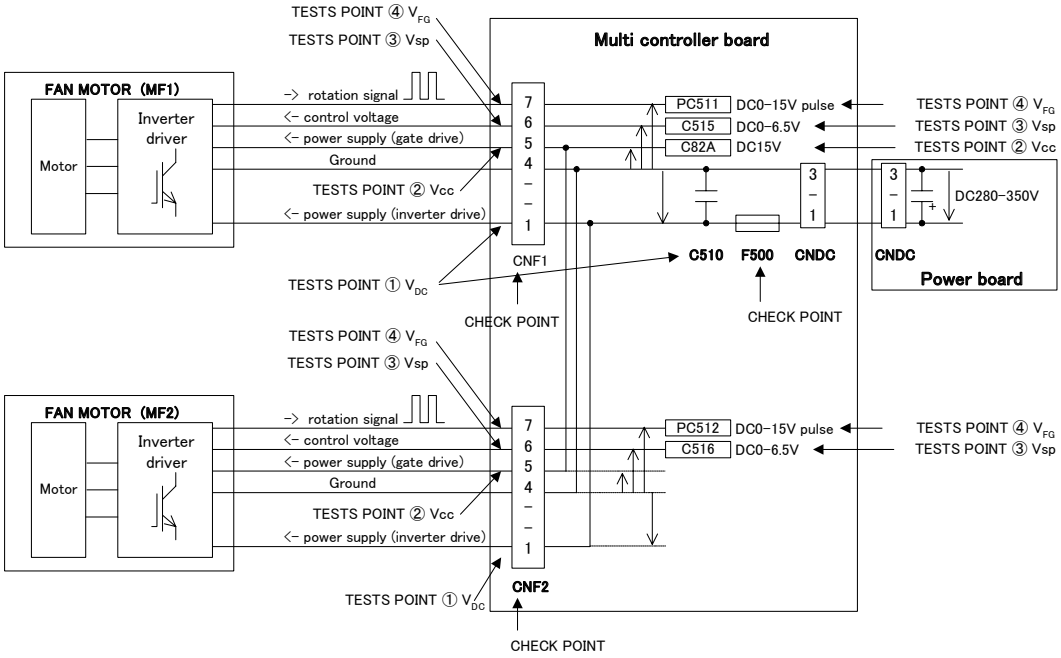

· The inverter control P.C. board is built in the fan motor of this outdoor unit.

· When F500 that is on controller board is blown, change the fan motor and multi controller board at the same time (F500 is impossisble to changae).

· For outdoor unit, there are 2 fan motors (up and down; MF1/MF2), it is possible to connect to either CNF1 or CNF2 on the board.

· It is abnormal when the abnormlity is detected from either both fan motors or only one side.

Check method of multi controller board

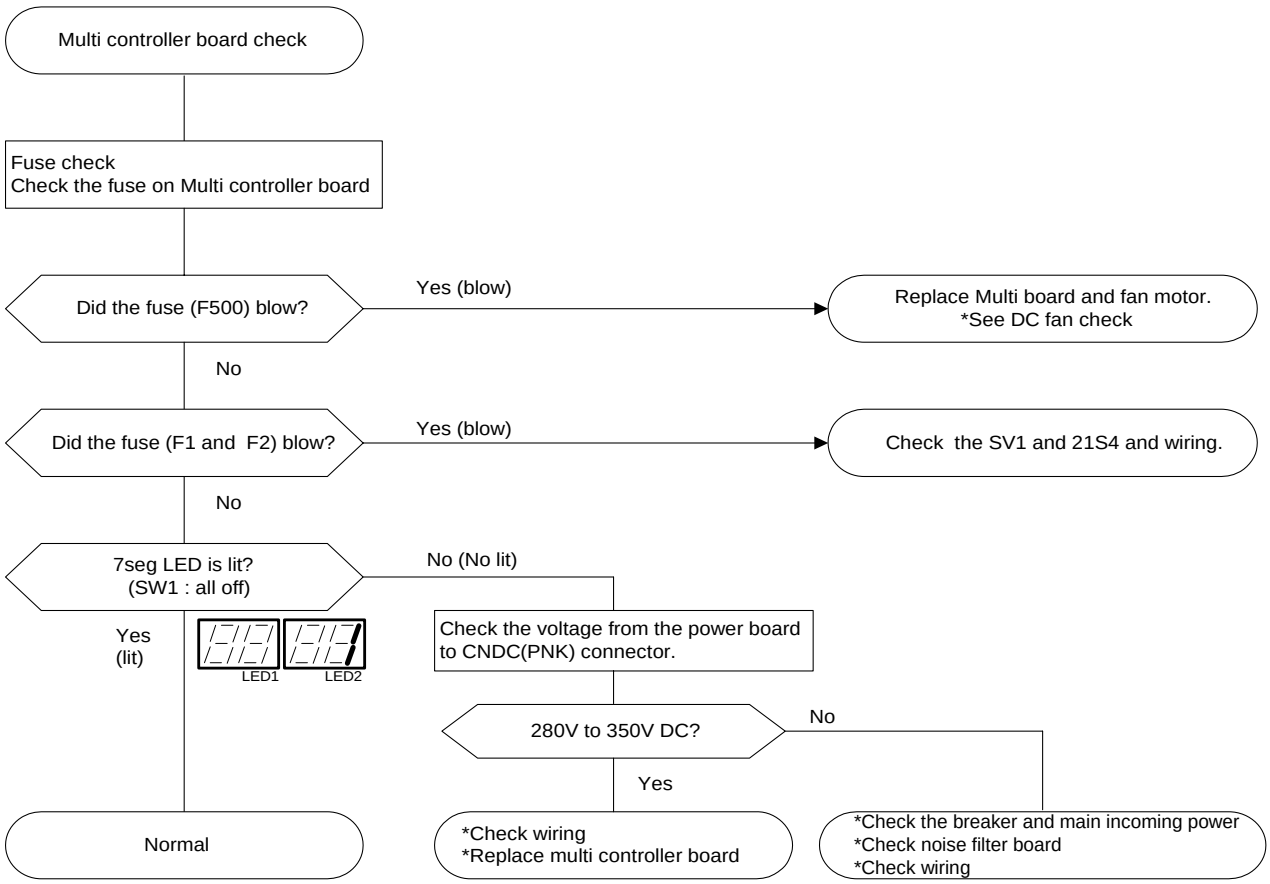

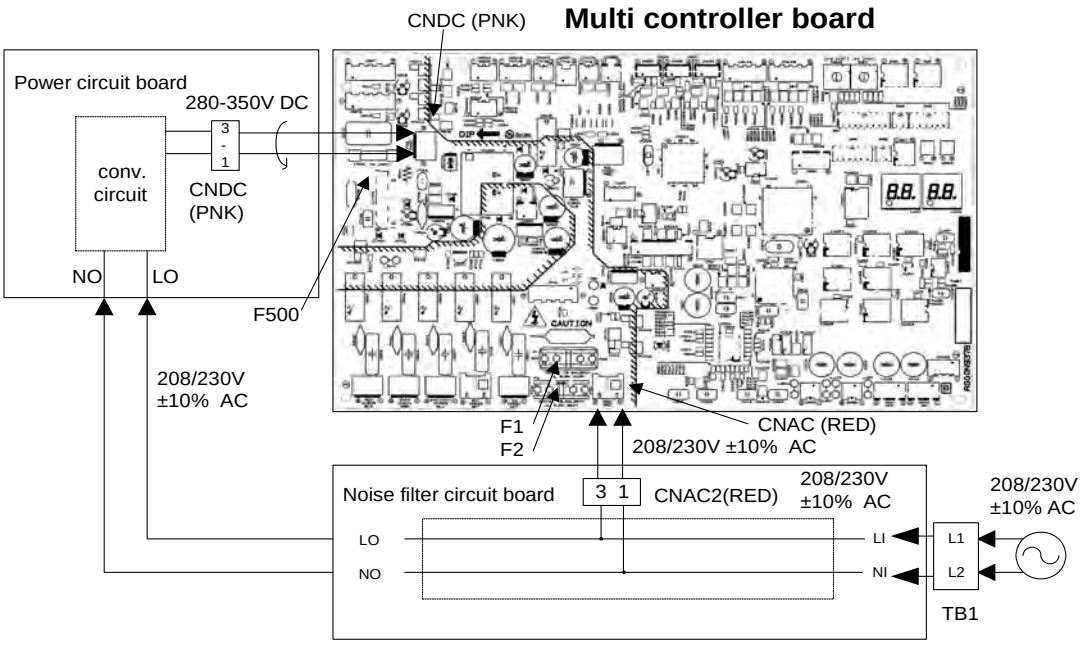

Check method of power board

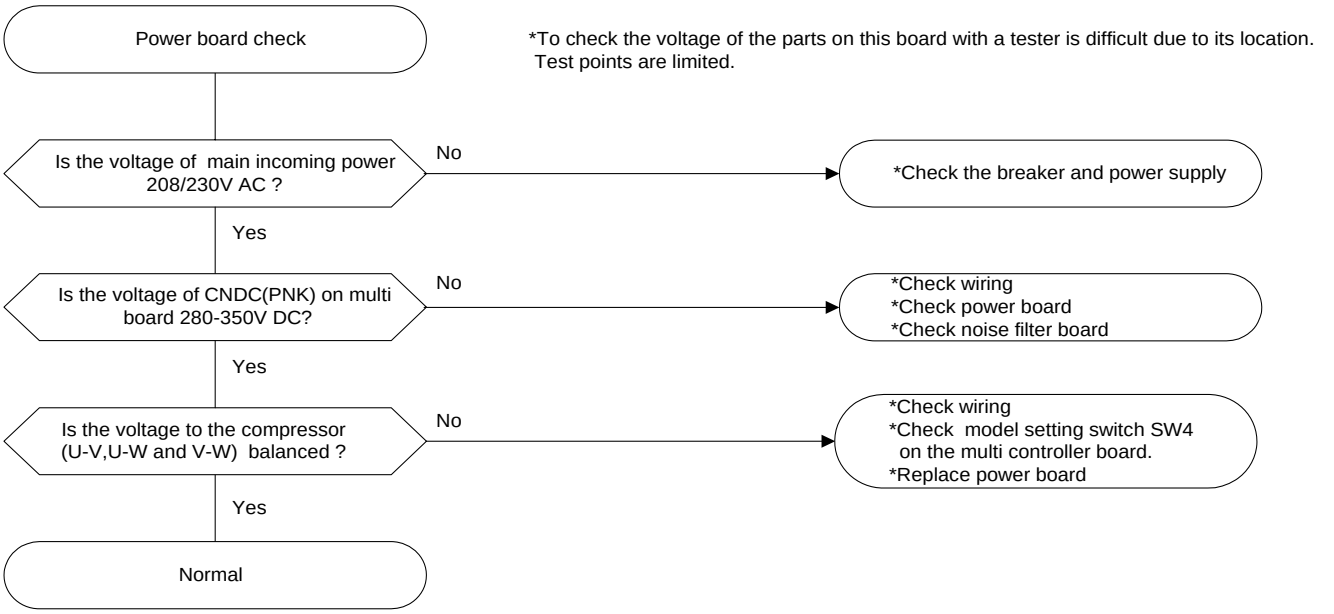

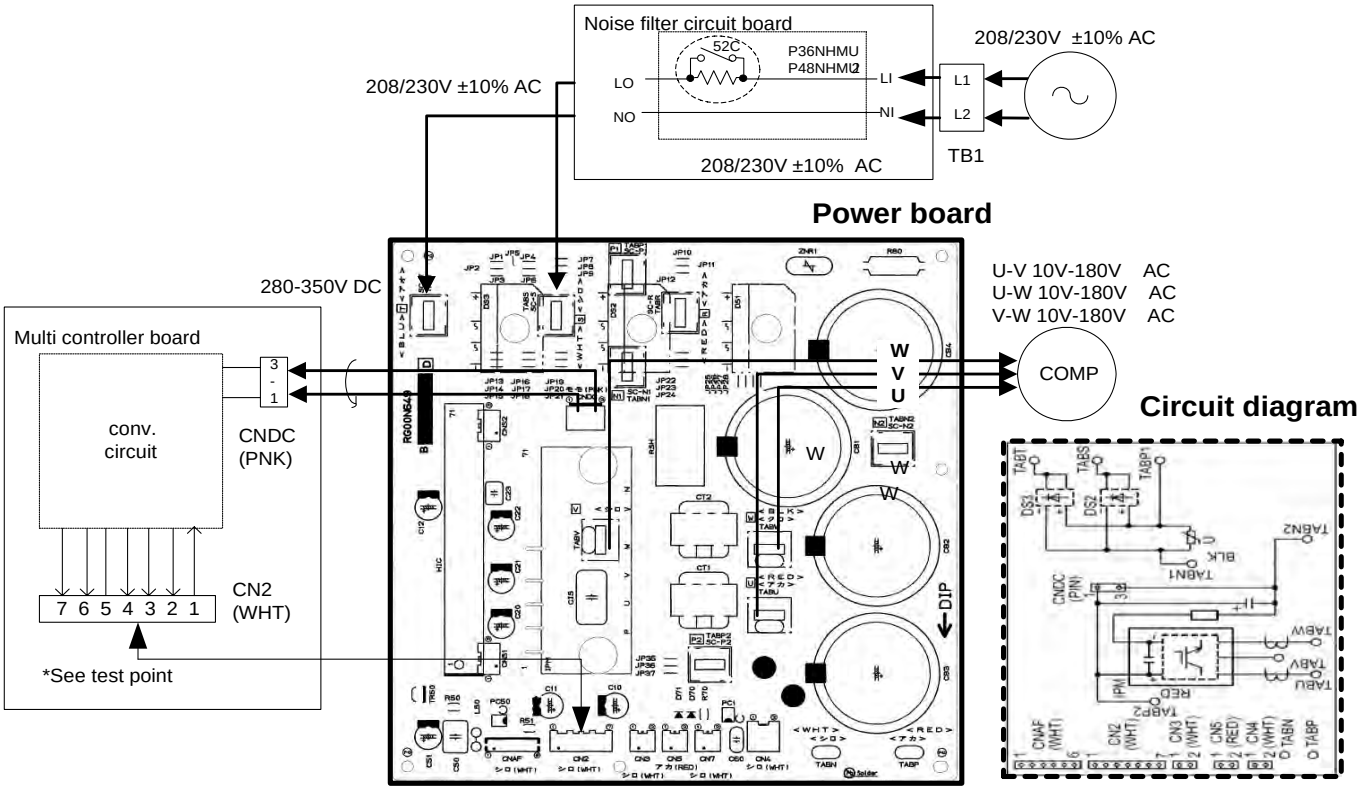

Check method of noise filter circuit board

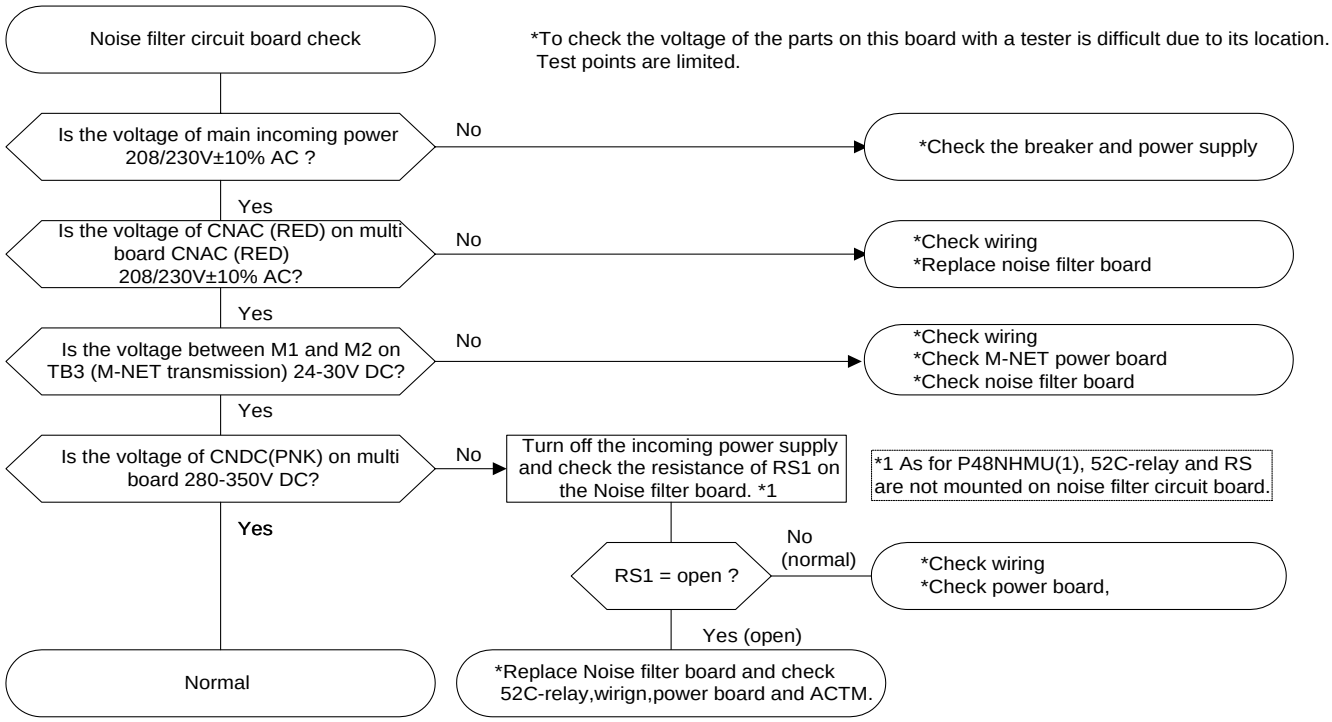

Circuit diagram

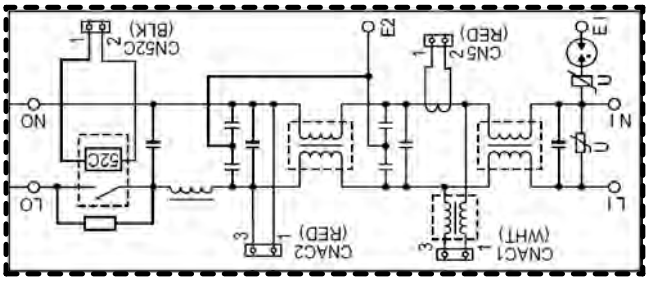

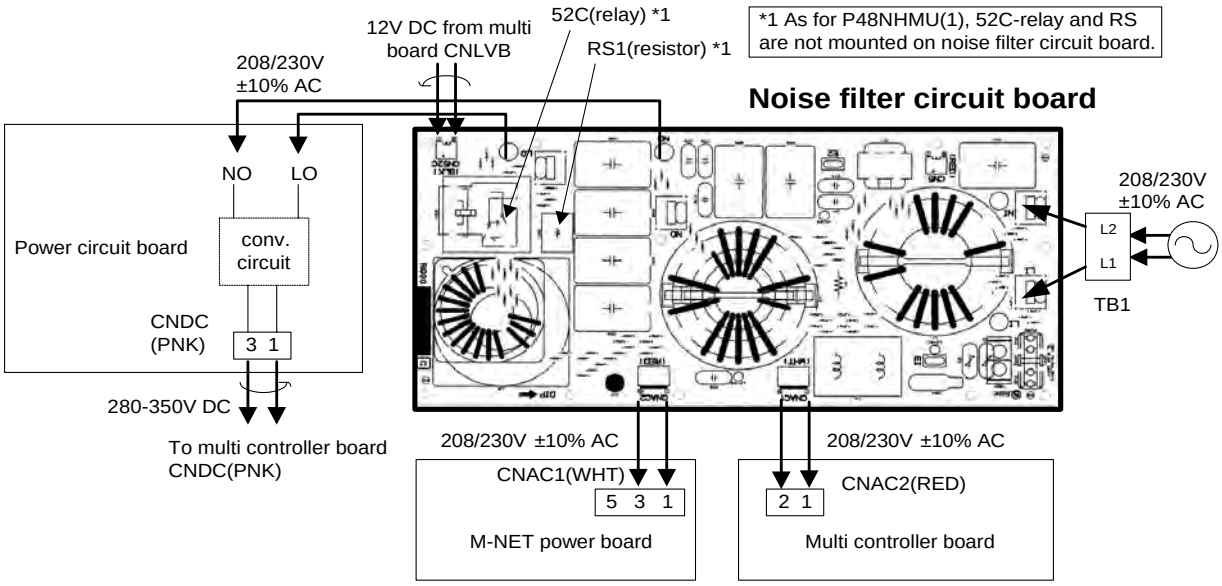

Check method of ACTM

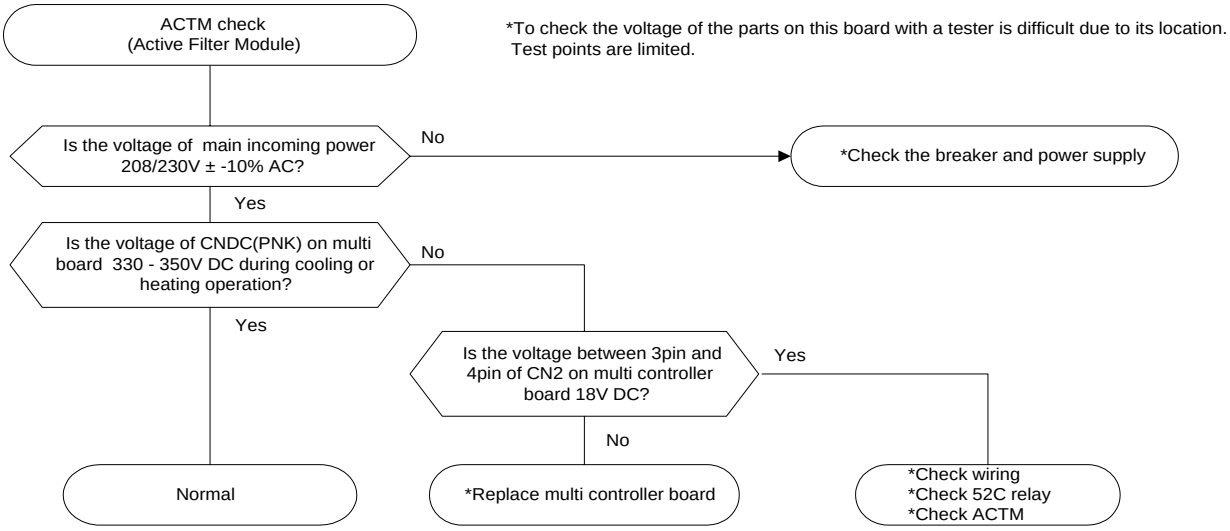

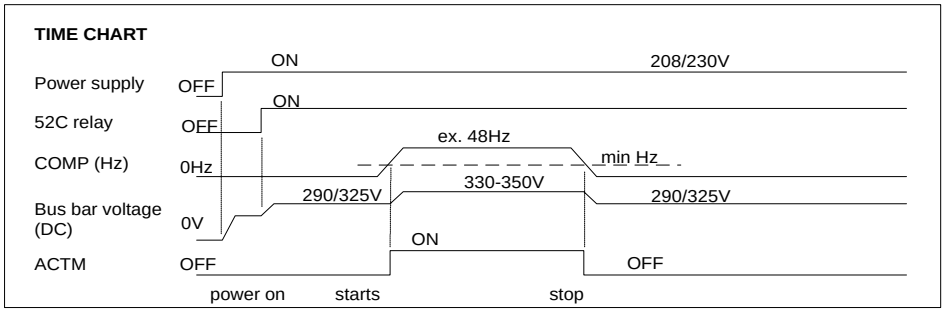

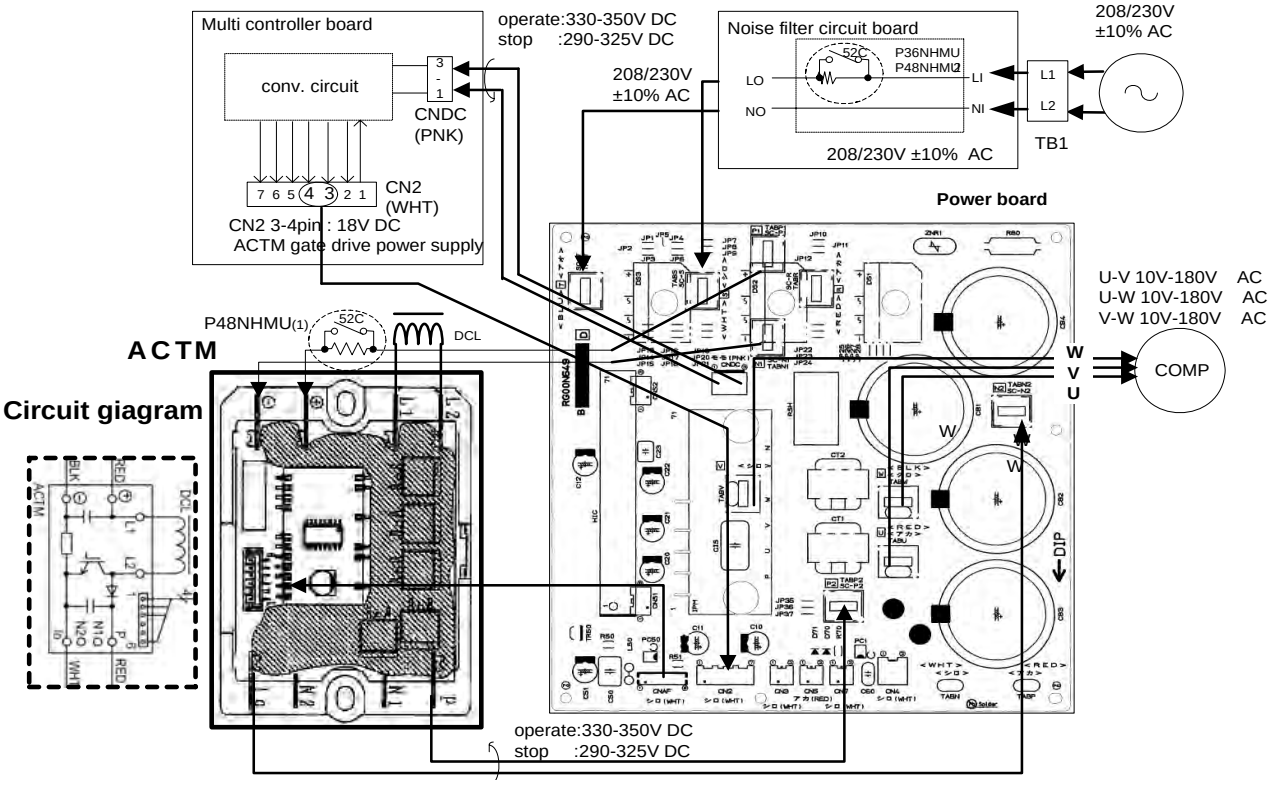

Check method of M-NET transmission power board

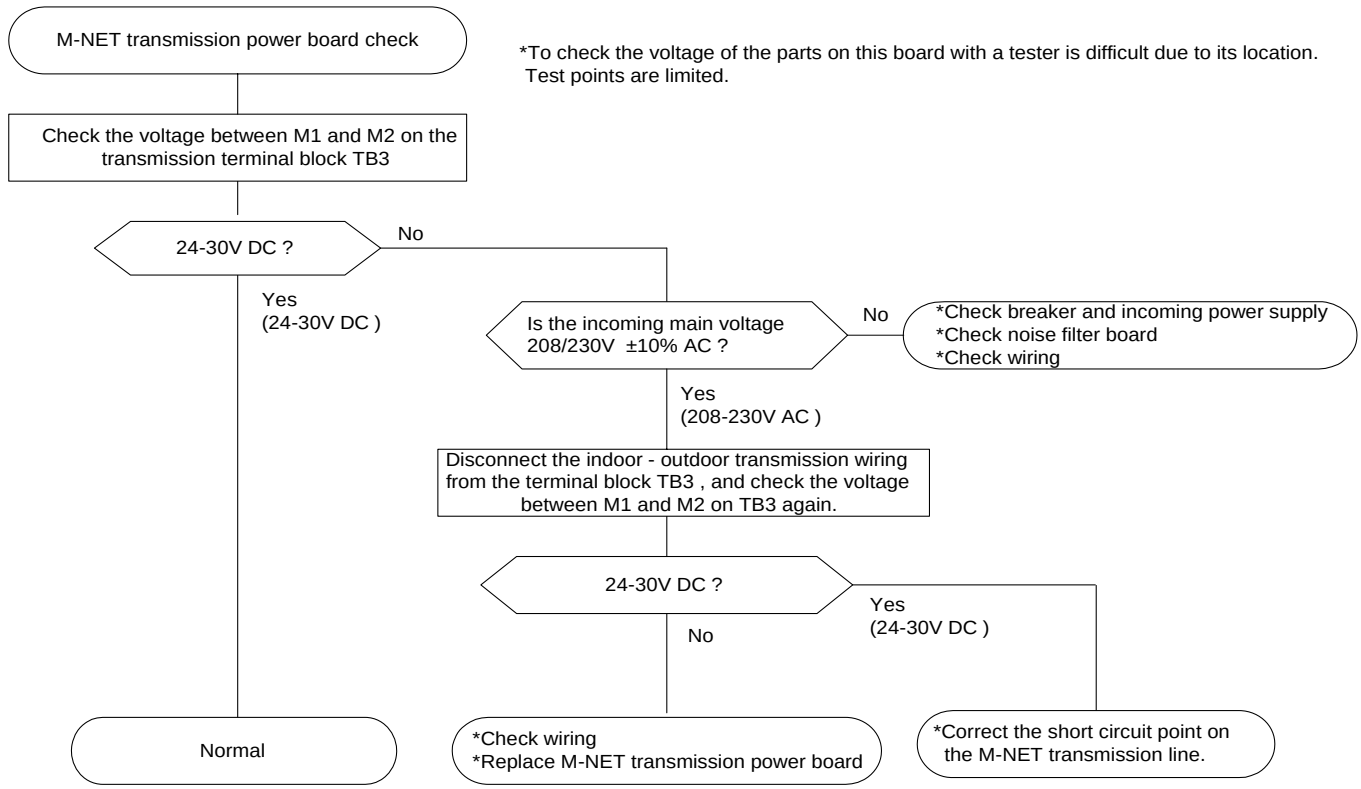

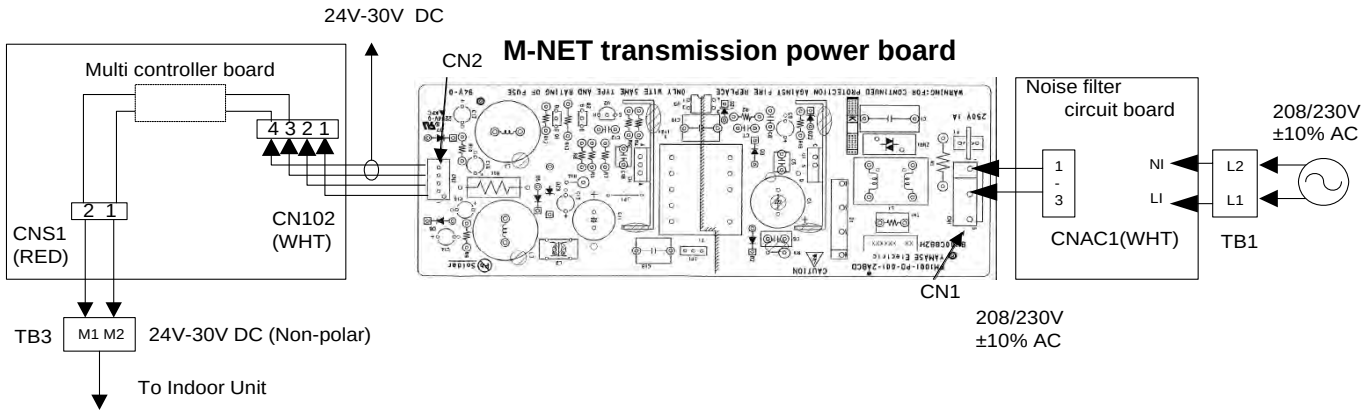

9-8. HOW TO CHECK THE COMPONENTS

<HIGH PRESSURE SENSOR>

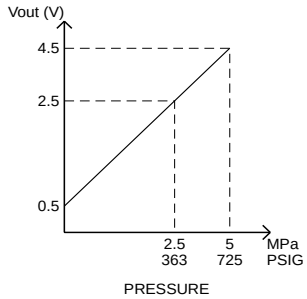

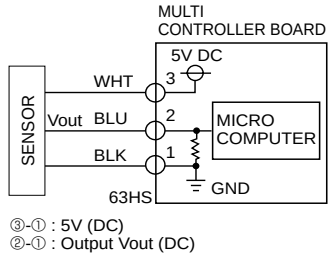

<Thermistor feature chart>

Low temperature thermistors

- Thermistor <Outdoor pipe> (TH3)
- Thermistor <Low pressure saturated temperature> (TH6)
- Thermistor <Outdoor> (TH7)

Thermistor R0 = 15kΩ ± 3%
B constant = 3480 ± 2%

$R_t = 15\exp\{3480(\frac{1}{273+t} - \frac{1}{273})\}$ t : ℃=(°F-32)/1.8

0℃ [32°F]	15kΩ	30℃ [86°F]	4.3kΩ
10℃ [50°F]	9.6kΩ	40℃ [104°F]	3.0kΩ
20℃ [68°F]	6.3kΩ		
25℃ [77°F]	5.2kΩ		

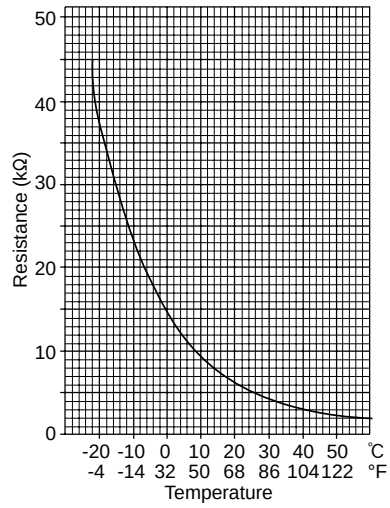

Medium temperature thermistor

Heatsink temperature thermistor (TH8)

Thermistor R50 = 17kΩ ± 2%
B constant = 4170 ± 3%

$R_t = 17\exp\{4170(\frac{1}{273+t} - \frac{1}{323})\}$ t : ℃=(°F-32)/1.8

0℃ [32°F]	180kΩ
25℃ [77°F]	50kΩ
50℃ [122°F]	17kΩ
70℃ [158°F]	8kΩ
90℃ [194°F]	4kΩ

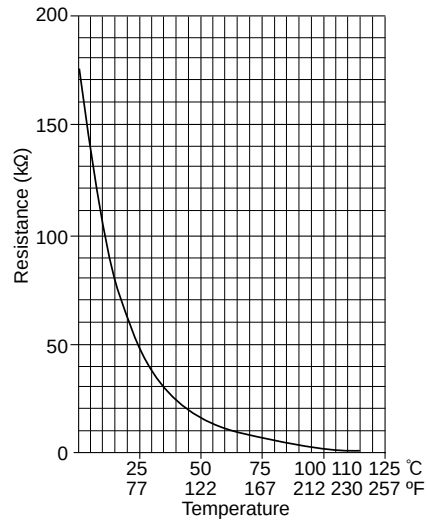

High temperature thermistor

- Thermistor <Discharge> (TH4)

Thermistor R120 = 7.465kΩ ± 2%
B constant = 4057 ± 2%

$R_t = 7.465\exp\{4057(\frac{1}{273+t} - \frac{1}{393})\}$ t : ℃=(°F-32)/1.8

20℃ [68°F]	250kΩ	70℃ [158°F]	34kΩ
30℃ [86°F]	160kΩ	80℃ [176°F]	24kΩ
40℃ [104°F]	104kΩ	90℃ [194°F]	17.5kΩ
50℃ [122°F]	70kΩ	100℃ [212°F]	13.0kΩ
60℃ [140°F]	48kΩ	110℃ [230°F]	9.8kΩ

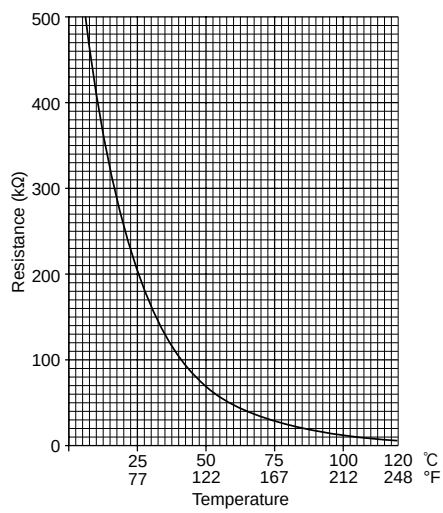

9-9. TEST POINT DIAGRAM

Outdoor multi controller board

PUMY-P48NHMU **PUMY-P48NHMU$_1$** **PUMY-P48NHMU$_2$**
PUMY-P48NHMU-BS **PUMY-P48NHMU$_1$-BS** **PUMY-P48NHMU$_2$-BS**
PUMY-P36NHMU **PUMY-P36NHMU-BS**

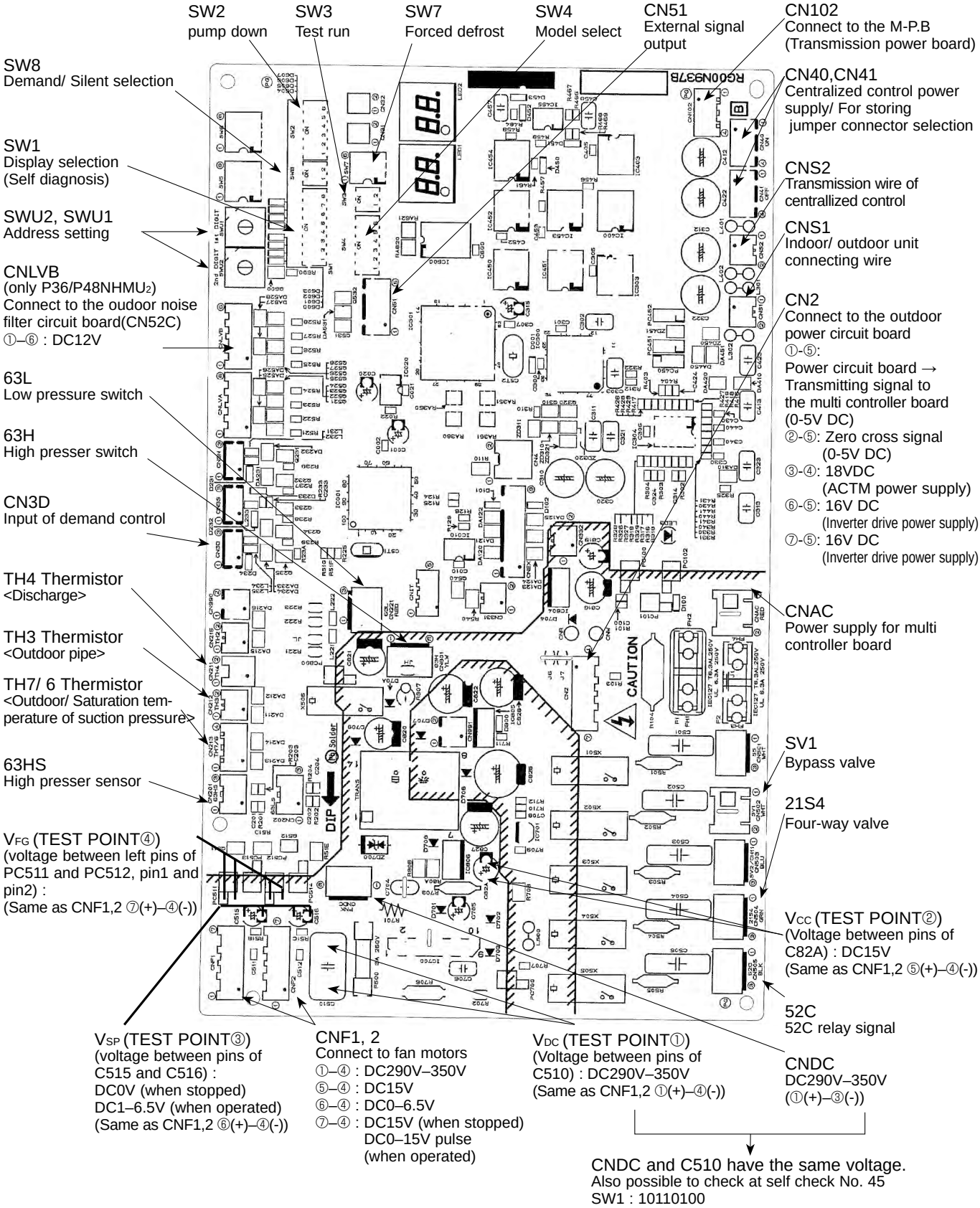

Outdoor power circuit board
PUMY-P48NHMU
PUMY-P48NHMU$_1$
PUMY-P48NHMU$_2$
PUMY-P48NHMU-BS
PUMY-P48NHMU$_1$-BS
PUMY-P48NHMU$_2$-BS
PUMY-P36NHMU
PUMY-P36NHMU-BS

Brief Check of POWER MODULE
※ Usually, they are in a state of being short-circuited if they are broken.
Measure the resistance in the following points (connectors, etc.).
If they are short-circuited, it means that they are broken.
1. Check of POWER MODULE
①.Check of DIODE circuit
S - P1 , T - P1, S - N1 , T - N1
②.Check of IGBT circuit
P2 - U , P2 - V , P2 - W , N2 - U , N2 - V , N2 - W
Note:The marks, L , N , N1 , N2, P1, P2 ,U , V and W shown in the diagram are not actually printed on the board.

CN2
Connect to the outdoor controller circuit board (CN2)
①-⑤:Transmitting signal to the outdoor controller circuit board (0~5V DC)
②-⑤:Zero cross signal (0~5V DC)
③-④:18V DC
⑥-⑤:16V DC
⑦-⑤:16V DC

CNDC
310V DC (①+, ③–)
Connect to the outdoor controller circuit board

TABS/T
Connect to the outdoor noise filter circuit board
Voltage among phases:208/230V AC

TABN1/SC-N1
Connect to the ACTM(-)

CN3
Thermistor (TH8)
<Heatsink>

CN5
Detection of primary current
Connect to the outdoor noise filter circuit board (CN5)

TABP1/SC-P1
Connect to 52C (P48NHMU)
Connect to ACTM (+)
(P36NHMU, P48NHMU$_2$)

CN4
Connect to the outdoor controller circuit board (CN4)

TABP2/SC-P2
Connect to the ACTM(P)

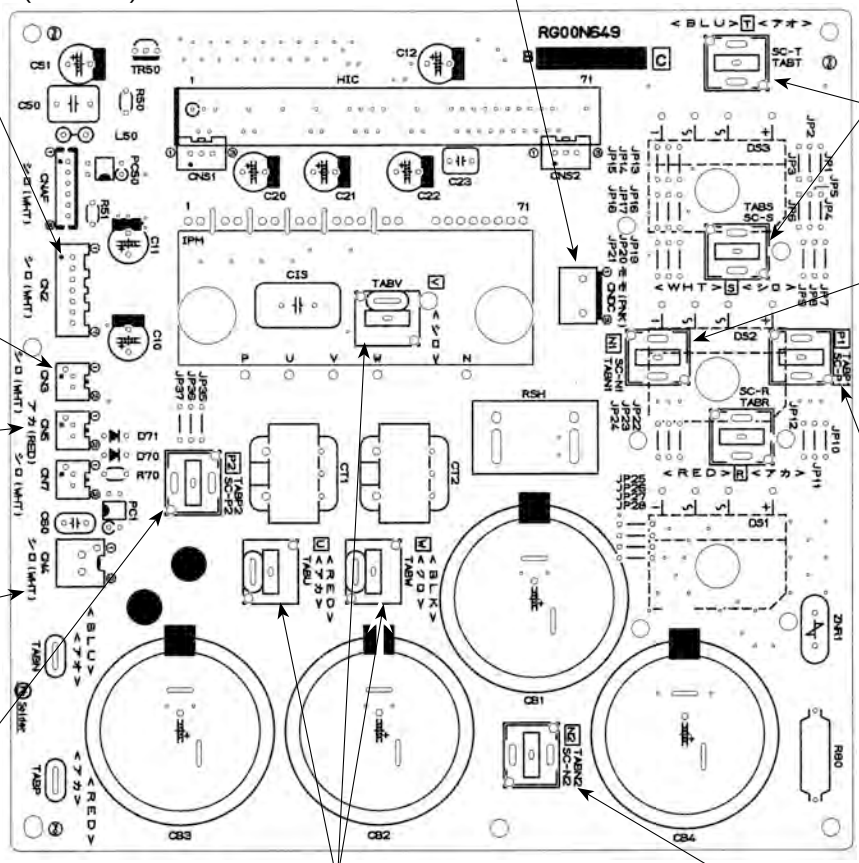

TABU/V/W
Connect to the compressor (MC)
Voltage among phases:10V~180V AC

TABN2/SC-N2
Connect to the ACTM (N2)

Outdoor noise filter circuit board
PUMY-P48NHMU
PUMY-P48NHMU-BS
PUMY-P48NHMU$_1$
PUMY-P48NHMU$_1$-BS

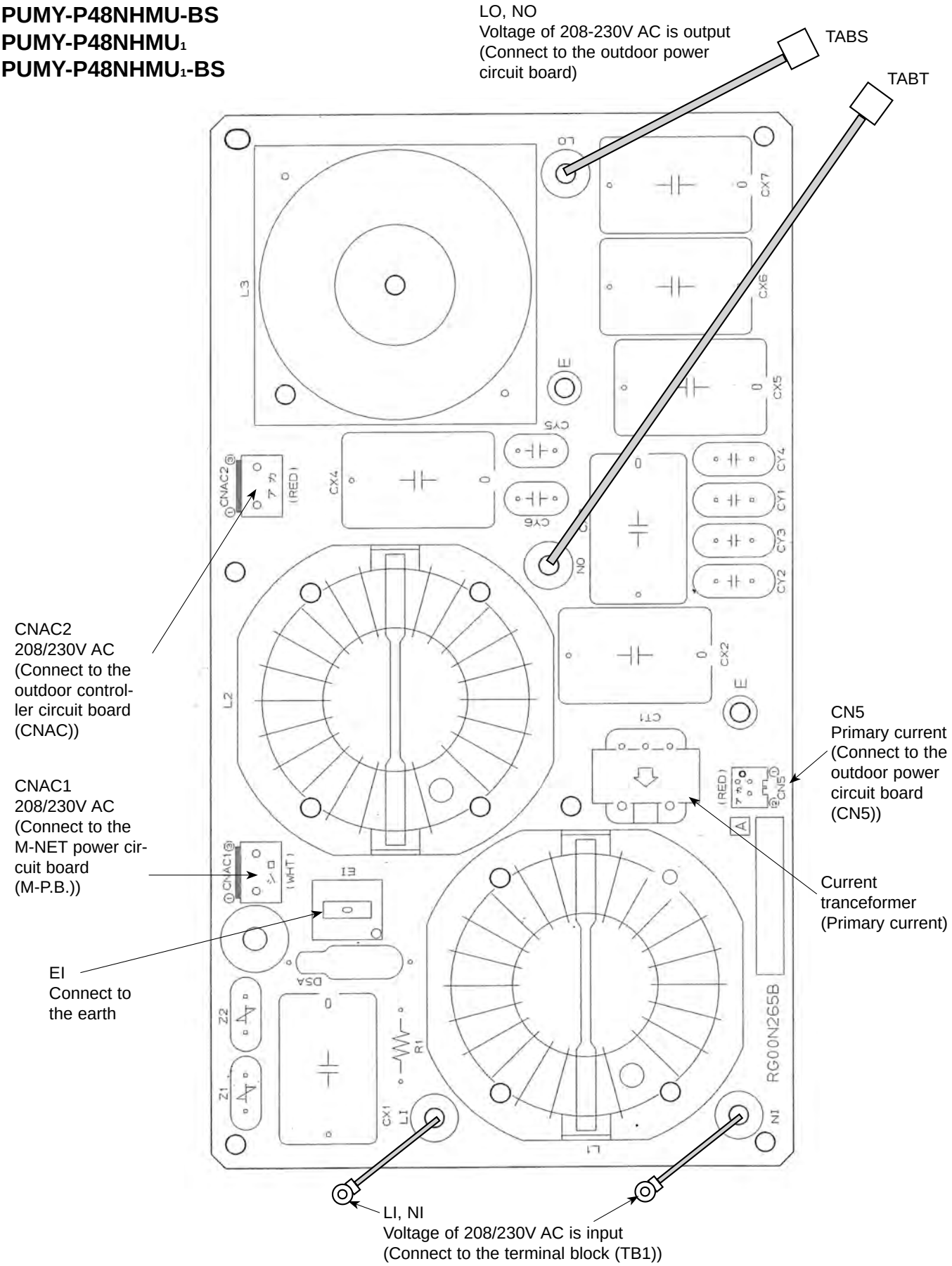

Outdoor noise filter circuit board
PUMY-P36NHMU
PUMY-P36NHMU-BS
PUMY-P48NHMU$_2$
PUMY-P48NHMU$_2$-BS

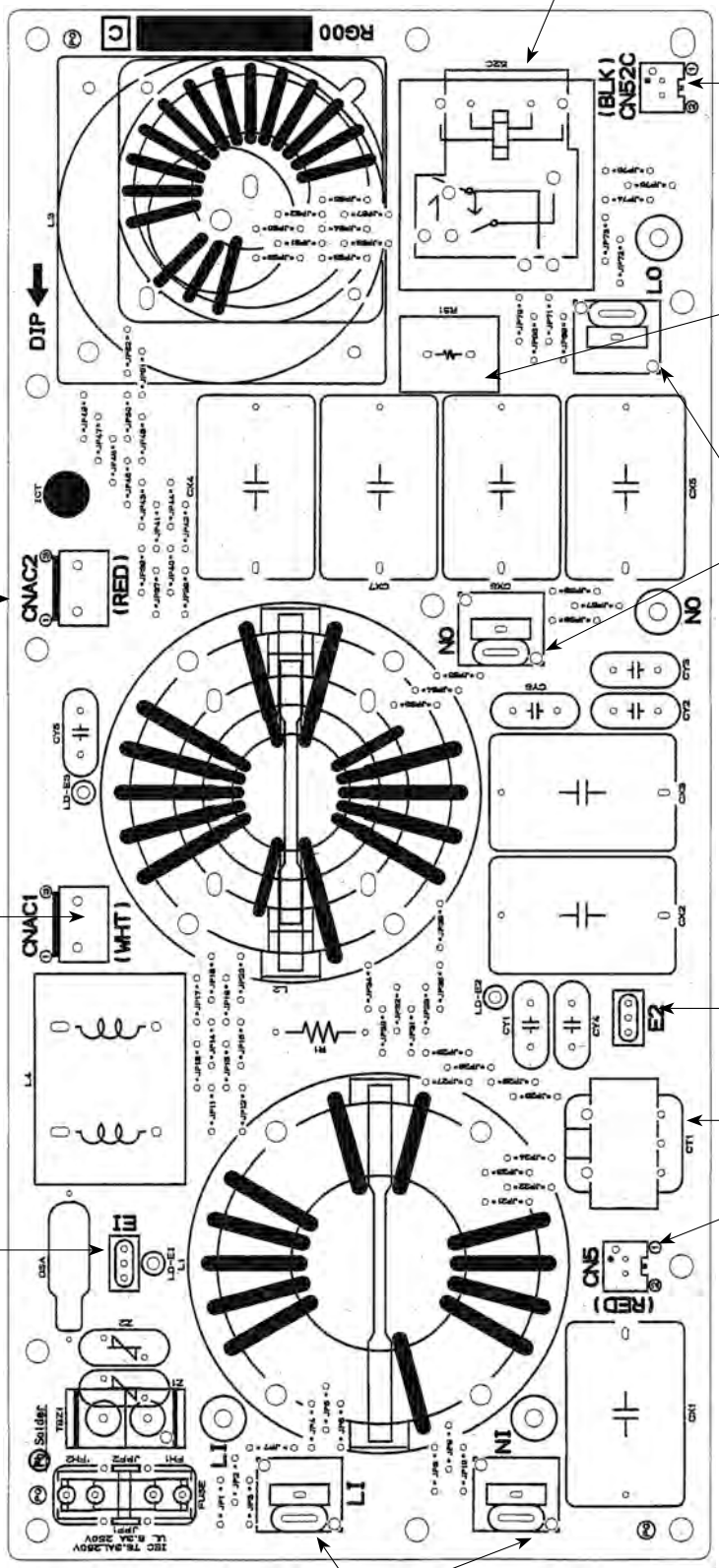

Transmission power board

PUMY-P48NHMU **PUMY-P48NHMU$_1$** **PUMY-P48NHMU$_2$**
PUMY-P48NHMU-BS **PUMY-P48NHMU$_1$-BS** **PUMY-P48NHMU$_2$-BS**
PUMY-P36NHMU **PUMY-P36NHMU-BS**

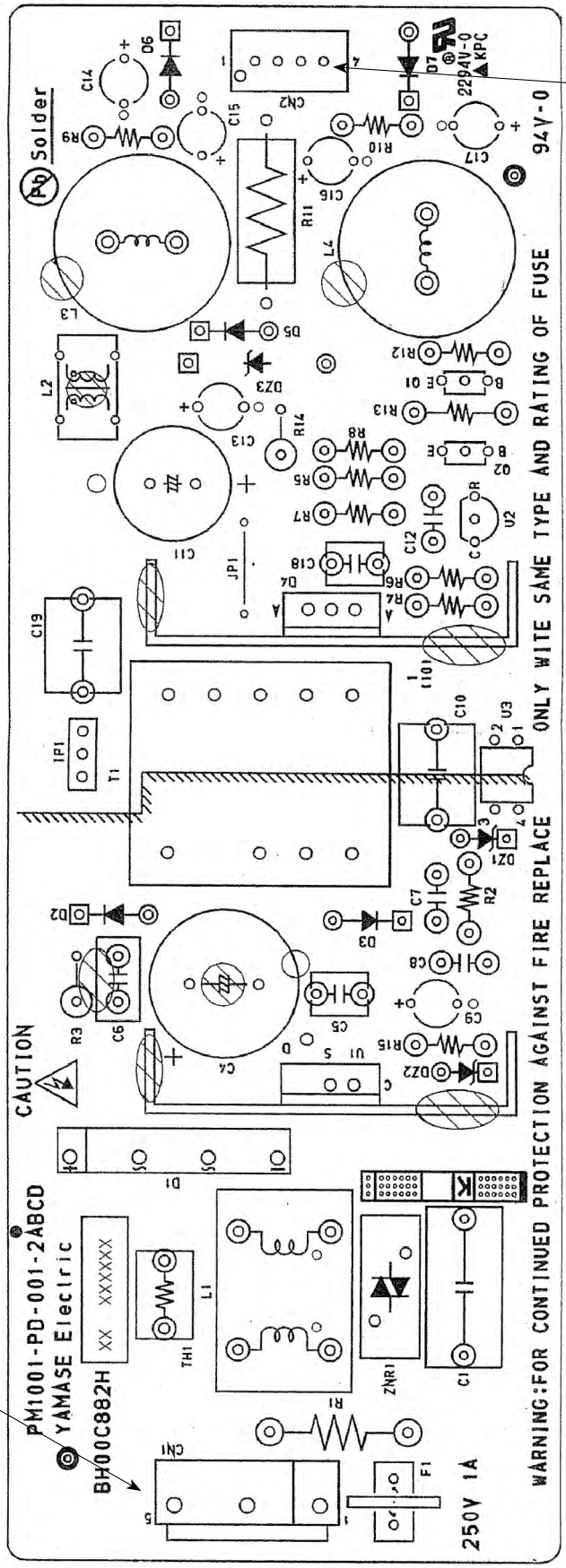

Active filter module
PUMY-P48NHMU
PUMY-P48NHMU-BS
PUMY-P48NHMU$_1$
PUMY-P48NHMU$_1$-BS

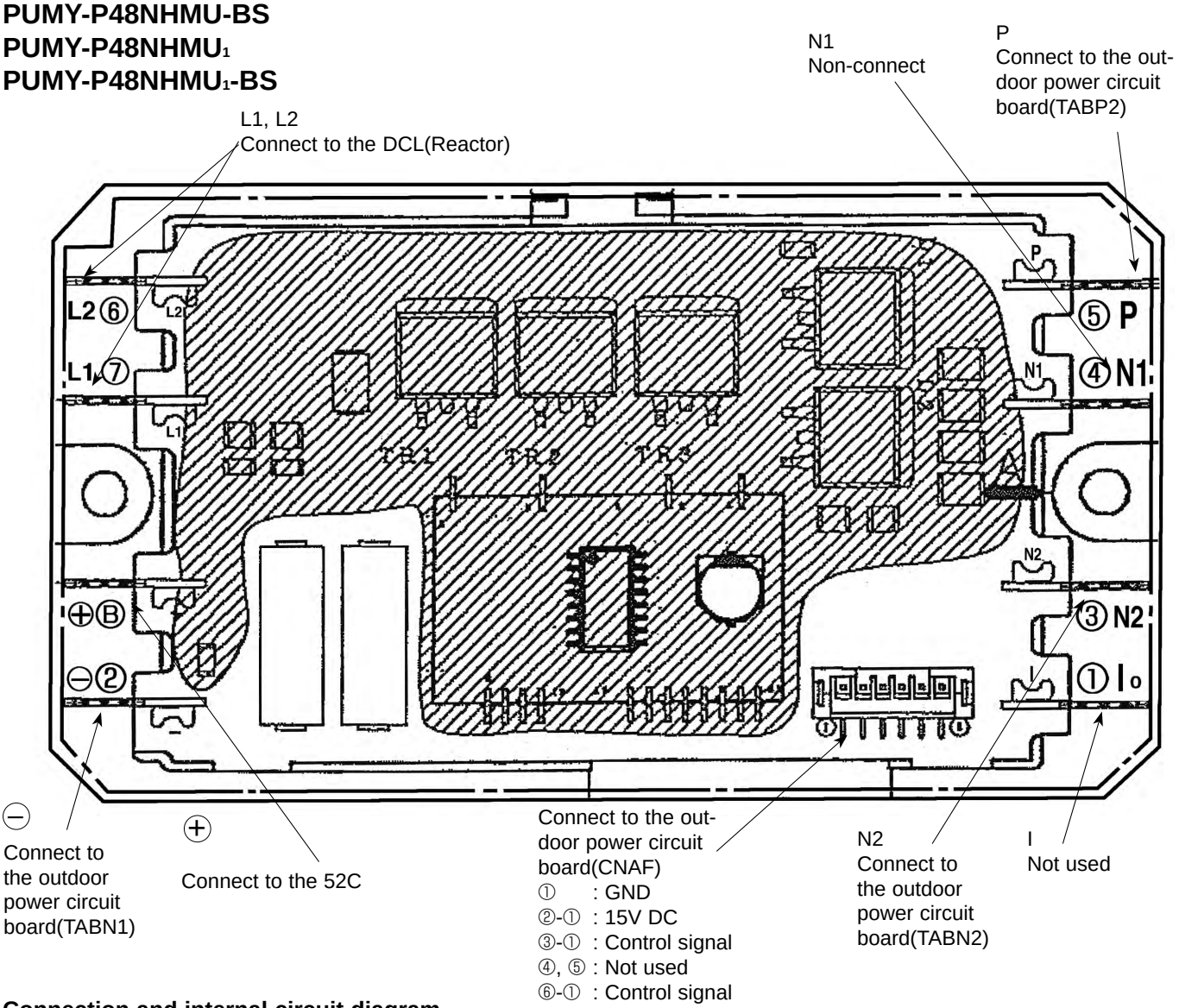

Connection and internal circuit diagram

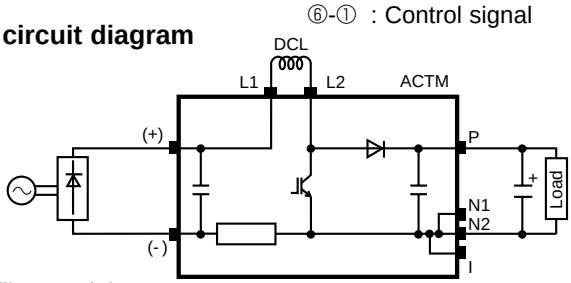

Tester check points of Acive filter module

	Error condition	Normal value (reference)	Symptom when the unit is in trouble
(–) and N1 / N2 / I	open	less than 1Ω	① The unit does not operate (can not be switched ON)
(–) and L2	short	100kΩ ~ 1MΩ	① The breaker operates
	open	※	① The unit does not operate (can not be switched ON) ②4220 Abnormal stop (9-10. No.189 "ACTM error" display)
P and L2	short	100kΩ ~ 1MΩ	① The breaker operates
	open	※	① The unit does not operate (can not be switched ON) ②4220 Abnormal stop (9-10. No.189 "ACTM error" display)
P and N1 / N2 / I	short	100kΩ ~ 1MΩ	① The breaker operates
	open	※	① The unit does not operate (can not be switched ON) ②4220 Abnormal stop (9-10. No.189 "ACTM error" display)
L2 and N1 / N2 / I	short	100kΩ ~ 1MΩ	① The breaker operates
	open	※	① The unit does not operate (can not be switched ON) ②4220 Abnormal stop (9-10. No.189 "ACTM error" display)

※ The symptom when the unit is in open error condition is described to determine open error by tester check.

Active filter module
PUMY-P36NHMU
PUMY-P36NHMU-BS
PUMY-P48NHMU$_2$
PUMY-P48NHMU$_2$-BS

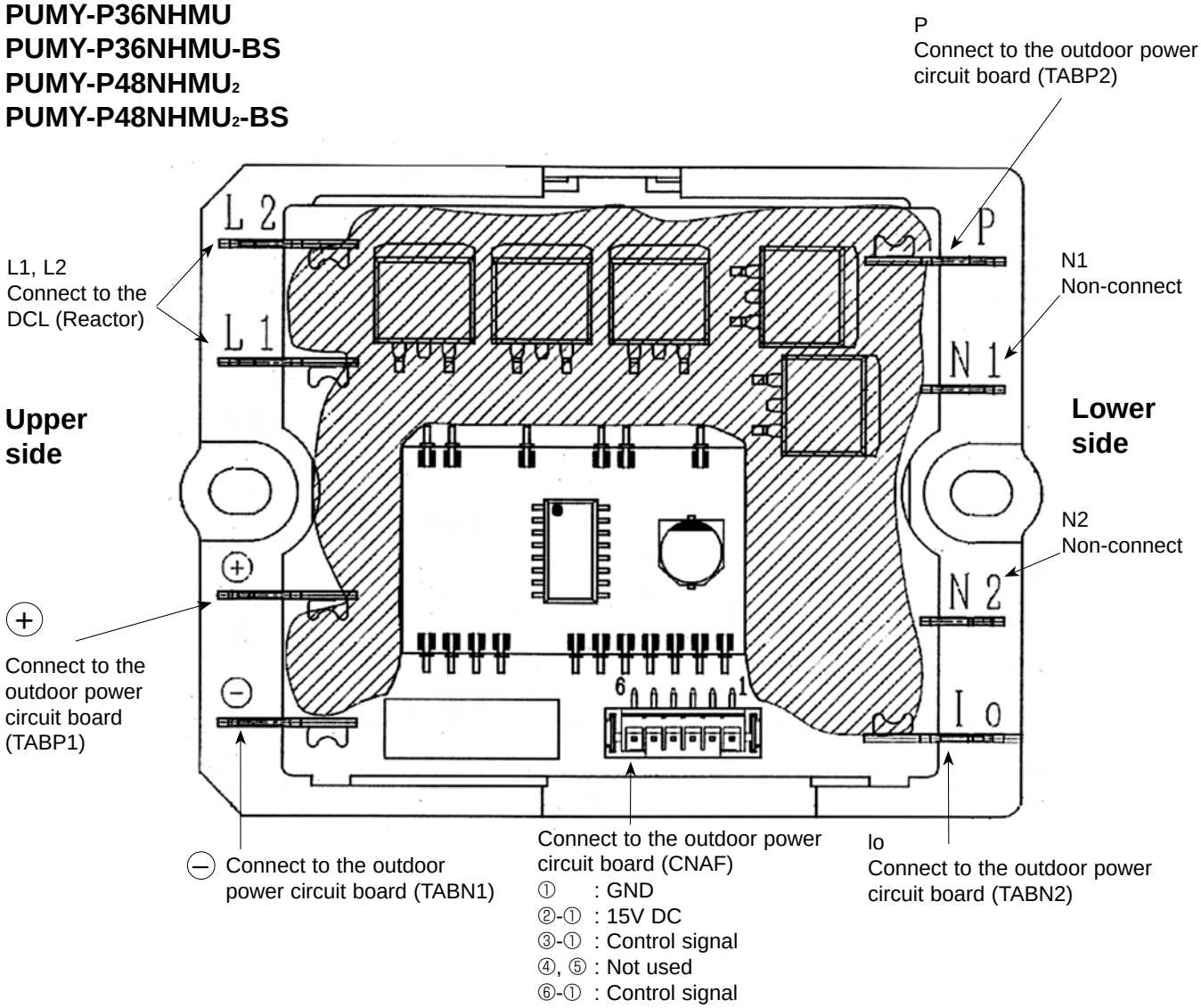

Connection and internal circuit diagram

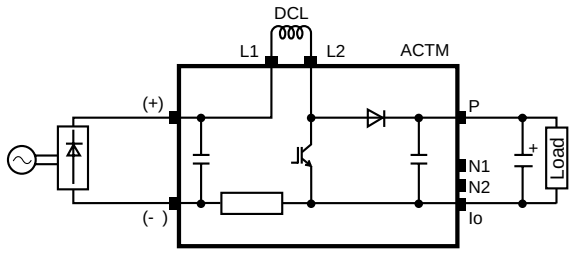

Tester check points of Acive filter module

	Error condition	Normal value (reference)	Symptom when the unit is in trouble
(–) and Io	open	less than 1Ω	① The unit does not operate (can not be switched ON)
(–) and L2	short	100kΩ ~ 1MΩ	① The breaker operates
	open	※	① The unit does not operate (can not be switched ON) ②4220 Abnormal stop (9-10. No.189 "ACTM error" display)
P and L2	short	100kΩ ~ 1MΩ	① The breaker operates
	open	※	① The unit does not operate (can not be switched ON) ②4220 Abnormal stop (9-10. No.189 "ACTM error" display)
P and Io	short	100kΩ ~ 1MΩ	① The breaker operates
	open	※	① The unit does not operate (can not be switched ON) ②4220 Abnormal stop (9-10. No.189 "ACTM error" display)
L2 and Io	short	100kΩ ~ 1MΩ	① The breaker operates
	open	※	① The unit does not operate (can not be switched ON) ②4220 Abnormal stop (9-10. No.189 "ACTM error" display)

※ The symptom when the unit is in open error condition is described to determine open error by tester check.

9-10. OUTDOOR UNIT FUNCTIONS

SW:setting
0....OFF
1....ON

No.	SW1 setting 12345678	Display mode	Display on the LED1, 2 (display data) 1	2		4	5	6	7	8	Notes
0	00000000	Relay output display	Compressor operation	52C		SV1	(SV2)			Lighting always	ON: light on OFF: light off
		Check display	0000~9999 (Alternating display of addresses and error code)								•When abnormality occurs, check display.
1	10000000	Indoor unit check status	No.1 unit check	No.2 unit check		No.4 unit check	No.5 unit check	No.6 unit check	No.7 unit check	No.8 unit check	Check: light on Normal: light off
2	01000000	Protection input	High-pressure abnormality	SHd(low discharge temperature) abnormality	Discharge temprature abnormality	TH4 abnormality	TH3 abnormality	Outdoor fan rotantial frequency abnormality	TH7 abnormality	TH8 abnormality	Display input microprocessor protection (abnormality)
3	11000000	Protection input	Heatsink overheating	Over current interception	Voltage abnormality	Insufficient refigerant amount abnormality	Current sensor abnormality	Low-pressure abnormality	63HS abnormality	start over current interception abnormality	
4	00100000	Protection input	Abnormality in the number of indoor units	Address double setting abnormality	Indoor unit capacity error	Over capacity	Indoor unit address error	Outdoor unit address error	Current sensor open/short	serial communication abormality	
5	10100000	Abnormality delay display 1	High-pressure abnormality delay	SHd(low discharge temperature) abnormality delay	Discharge temprature abnormality delay	TH4 abnormality delay	TH3 abnormality delay	Outdoor fan rotantial frequency abnormality delay	TH7 abnormality delay	start over current interception abnormality delay	Display all abnormalities remaining in abnormality delay
6	01100000	Abnormality delay display 2	Heatsink overheating delay	Over current interception delay	Voltage abnormality delay	Insufficient refigerant amount abnormality delay	Current sensor abnormality delay	Low-pressure abnormality delay	63HS abnormality delay	start over current interception abnormality delay	
7	11100000	Abnormality delay display 3				Frozen protection delay	Power module abnormality delay	TH6 abnormality delay	Current sensor open/short delay	communication(POWER BOARD)abormality delay	
8	00010000	Abnormality delay history 1	High-pressure abnormality delay	SHd(low discharge temperature) abnormality delay	Discharge temprature abnormality delay	TH4 abnormality delay	TH3 abnormality delay	Outdoor fan rotantial frequency abnormality delay	TH7 abnormality delay	start over current interception abnormality delay	Display all abnormalities remaining in abnormality delay history
9	10010000	Abnormality delay history 2	Heatsink overheating delay	Over current interception delay	Voltage abnormality delay	Insufficient refigerant amount abnormality delay	Current sensor abnormality delay	Low-pressure abnormality delay	63HS abnormality delay	start over current interception abnormality delay	
10	01010000	Abnormality delay history 3				Frozen protection delay	Power module abnormaliy delay	TH6 abnormality delay	Current sensor open/short delay	communication(POWER BOARD)abormality delay	
11	11010000	Abnormality code history 1 (the latest)	Alternating display of addresses 0000-9999 and abnormality code (including abnormality delay code)								•Display abnormalities up to present (including abnormality terminals) •History record in 1 is the latest; records become older in sequence; history record in 10 is the oldest.
12	00110000	Abnormality code history 2									
13	10110000	Abnormality code history 3									
14	01110000	Abnormality code history 4									
15	11110000	Abnormality code history 5									
16	00001000	Abnormality code history 6									
17	10001000	Abnormality code history 7									
18	01001000	Abnormality code history 8									
19	11001000	Abnormality code history 9									
20	00101000	Abnormality code history 10 (the oldest)									
21	10101000	Cumulative time	0~9999(unit::1-hour)								Display of cumulative compressor operating time
22	01101000	Cumulative time	0~9999(unit::10-hour)								
23	11101000	Outdoor unit operation display	Excitation Current	Restart after 3 minutes	Compressor operation	Abnormality(detection)					
24	00011000	Indoor unit operation mode	No.1 unit mode	No.2 unit mode	No.3 unit mode	No.4 unit mode	No.5 unit mode	No.6 unit mode	No.7 unit mode	No.8 unit mode	Cooling : light on Heating: light blinking Stop fan: light off
25	10011000	Indoor unit operation display	No.1 unit operation	No.2 unit operation	No.3 unit operation	No.4 unit operation	No.5 unit operation	No.6 unit operation	No.7 unit operation	No.8 unit operation	Thermo ON : light on Thermo OFF : light off
26	01011000	Capacity code (No. 1 indoor unit)	0~255								•Display of indoor unit capacity code •The No. 1 unit will start from the address with the lowest number
27	11011000	Capacity code (No. 2 indoor unit)									
28	00111000	Capacity code (No. 3 indoor unit)									
29	10111000	Capacity code (No. 4 indoor unit)									
30	01111000	Capacity code (No. 5 indoor unit)									

Delay code	Abnormality delay	Delay code	Abnormality delay
1202	Discharge temperature abnormality	1402	High-pressure abnormality
	Discharge temperature sensor (TH4) abnormality		Pressure sensor (63HS) abnormality
1205	Outdoor pipe temperature sensor (TH3) abnormality	1600	Over charge refrigerant abnormality
1211	Saturation temperature of suction pressure sensor (TH6) abnormality	1601	Insufficient refrigerant abnormality
1214	Radiator panel thermistor (TH8) abnormality	4320	Frequency converter insufficient wiring voltage abnormality
1221	Outside air temperature sensor (TH7) abnormality	4330	Heatsink temperature abnormality
		4350	Power module abnormality

No.	SW1 setting 12345678	Display mode	Display on the LED1, 2 (display data) 1	2	3	4	5	6	7	8	Notes
31	11111000	IC1 operation mode	OFF	Fan	Cooling thermo ON	Cooling thermo OFF	Heating thermo ON	Heating thermo OFF			•Display of indoor unit operating mode
32	00000100	IC2 operation mode									
33	10000100	IC3 operation mode									
34	01000100	IC4 operation mode									
35	11000100	IC5 operation mode									
36	00100100	OC operation mode	ON/OFF	Heating/Cooling	Abnormal/Normal	DEFROST/NO	Refrigerant pull back/no	Excitation current/no	3-min.delay/no		Light on/light off
37	10100100	External connection status	P97:Autochange over permission CN3N1-3 input	P96:Autochange over fixed mode CN3N1-2 input	P95:Undefined CN3S1-2 input	P94:Demand CN3D1-3 input	P93:Silent CN3D1-2 input				Input: light off No input: light on
38	01100100	Communication demand capacity	0~255								Display of communication demand capacity
39	11100100	Number of compressor ON/OFF	0000~9999 (unit : o10)								
40	00010100	Compressor operating current	0~999.9 (A)								
41	10010100	Input current of outdoor unit	0~999.9 (A)								
42	01010100	Thermo ON operating time	0000~9999 (unit : o10)								
43	11010100	Total capacity of thermo on	0~255								
44	00110100	Number of indoor units	0~255 (Max. 8 unit)								
45	10110100	DC bus voltage	0~999.9 (V)								
46	01110100	State of LEV control	Td over heat prevention	SHd declease prevention	Min.Sj correction depends on Td	LEV opening correction depends on Pd	LEV opening correction depends on Td	Correction of high compression ratio prevention			
47	11110100	State of compressor frequency control 1	Discharge pressure control	Discharge temperature control	Max. Hz control	Discharge temp.(heating) Backup	Discharge pressure(heating) Backup	Max. Hz control	Freeze prevention control		
48	00001100	State of compressor frequency control 2	Heatsink over heat pre-vention control	Secondary current control	Input current control		Frequency restrain of receipt voltage change				
49	10001100	Protection input				Frozen protection	TH6 abnormality	Power module abnormality			
50	01001100	The second current value when micro computer of POWER BOARD abnormality is deteced	0~999.9[Arms]								
51	11001100	The radiator panel temperature when microcomputer of POWER BOARD abnormality is deteced	-99.9~999.9(Short/Open:-99.9 or 999.9)								

State of compressor frequency(Hz) control (Words)	Content
Discharge pressure control	Hz control by pressure limitation
Discharge temperature control	Hz control by discharge temperature limitation
Max.Hz control	Max.Hz limitation when power supply on
SV control	Hz control by bypass valve
Abnormal rise of Pd control	Control that restrains abnormal rise of discharge pressure
Heatsink over heat prevention control	Heatsink over heat prevention control
Secondary current control	Secondary current control
Input current contol	Input current contol
Hz correction of receipt voltage decrease prevention	Max.Hz correction control due to voltage decrease
Hz restrain of receipt voltage change	Max.Hz correction control due to receipt voltage change

No.	SW1 setting 12345678	Display mode	Display on the LED1, 2 (display data)								Notes
			1	2	3	4	5	6	7	8	
64	00000010	Operational frequency	0~FF(16 progressive)								Display of actual operating frequency
65	10000010	Target frequency	0~255								Display of target frequency
66	01000010	Outdoor fan control step number	0~15								Display of number of outdoor fan control steps (target)
67	11000010	EER fan control step number (cooling)									
69	10100010	IC1 LEV Opening pulse	0~2000								Display of opening pulse of outdoor SLEV and indoor LEV
70	01100010	IC2 LEV Opening pulse									
71	11100010	IC3 LEV Opening pulse									
72	00010010	IC4 LEV Opening pulse									
73	10010010	IC5 LEV Opening pulse									
74	01010010	High-pressure sensor (Pd) kgf/cm^2	-99.9 ~ 999.9								Display of outdoor subcool (SC) data and detection data from high-pressure sensor and each thermistor
75	11010010	TH4(Td) °C									
76	00110010	TH6(ET) °C									
77	10110010	TH7(Outdoor-temp.) °C									
78	01110010	TH3(Outdoor pipe) °C									
80	00001010	TH8(Power module) °C									
81	10001010	IC1 TH23(Gas) °C	-99.9 ~ 999.9 (When the indoor unit is not connected,it is displayed as"0".)								
82	01001010	IC2 TH23(Gas) °C									
83	11001010	IC3 TH23(Gas) °C									
84	00101010	IC4 TH23(Gas) °C									
85	10101010	IC5 TH23(Gas) °C									
86	01101010	IC1 TH22(Liquid) °C									
87	11101010	IC2 TH22(Liquid) °C									
88	00011010	IC3 TH22(Liquid) °C									
89	10011010	IC4 TH22 (Liquid) °C									
90	01011010	IC5 TH22 (Liquid) °C									
91	11011010	IC1 TH21(Intake) °C									
92	00111010	IC2 TH21 (Intake) °C									
93	10111010	IC3 TH21 (Intake) °C									
94	01111010	IC4 TH21 (Intake) °C									
95	11111010	IC5 TH21 (Intake) °C									
96	00000110	Outdoor SC (cooling) °C	-99.9 ~ 999.9								

No.	SW1 setting 12345678	Display mode	Display on the LED1, 2 (display data) 1	2	3	4	5	6	7	8	Notes
97	10000110	Target subcool step	-2~4								Display of target subcool step data
98	01000110	IC1 SC/SH °C	-99.9 ~ 999.9 during heating: subcool (SC)/during cooling: superheat (SH)								Display of indoor SC/SH data
99	11000110	IC2 SC/SH °C									
100	00100110	IC3 SC/SH °C									
101	10100110	IC4 SC/SH °C									
102	01100110	IC5 SC/SH °C									
103	11100110	Discharge superheat (SHd) °C	-99.9~999.9								Display of discharge superheat data
105	10010110	Target Pd display (heating) kgf/cm²	Pdm(0.0~30.0)								Display of all control target data
106	01010110	Target ET display (cooling) °C	ETm(-2.0~23.0)								
107	11010110	Target outdoor SC (cooling) °C	SCm(0.0~20.0)								
108	00110110	Target indoor SC/SH (IC1) °C	SCm/SHm(0.0~20.0)								
109	10110110	Target indoor SC/SH (IC2) °C									
110	01110110	Target indoor SC/SH (IC3) °C									
111	11110110	Target indoor SC/SH (IC4) °C									
112	00001110	Target indoor SC/SH (IC5) °C									
121	10011110	TH4 (Td) °F	-99.9~999.9 [°F]								Display of detection data from high-pressure sensor and each thermistor
122	01011110	TH3 (Outdoor pipe) °F									
123	11011110	TH6 (ET) °F									
124	00111110	TH7 (Outdoor temp.) °F									
125	10111110	High pressure sensor (Pd) PSIG	0.0~711.0 [PSIG]								
126	01111110	TH8 (Power module) °F	-99.9~999.9 [°F]								
128	00000001	Actual frequency of abnormality delay	0~FF(16 progressive)								Display of actual frequency at time of abnormality delay
129	10000001	Fan step number at time of abnormality delay	0~15								Display of fan step number at time of abnormality delay
131	11000001	IC1 LEV opening pulse abnormality delay	0~2000								Display of opening pulse outdoor SLEV and indoor LEV at time of abnormality delay
132	00100001	IC2 LEV opening pulse abnormality delay									
133	10100001	IC3 LEV opening pulse abnormality delay									
134	01100001	IC4 LEV opening pulse abnormality delay									
135	11100001	IC5 LEV opening pulse abnormality delay									

No.	SW1 setting 12345678	Display mode	Display on the LED1, 2 (display data) 1	2	3	4	5	6	7	8	Notes
136	00010001	High-pressure sensor data at time of abnormality delay kgf/cm²	-99.9 ~ 999.9								Display of data from high-pressure sensor, all thermistors, and SC/SH at time of abnormality delay
137	10010001	TH4 sensor data at time of abnormality delay °C									
138	01010001	TH6 sensor data at time of abnormality delay °C									
139	11010001	TH3 sensor data at time of abnormality delay °C									
140	00110001	TH8 sensor data at time of abnormality delay °C									
141	10110001	OC SC (cooling) at time of abnormality delay °C									
142	01110001	IC1 SC/SH at time of abnormality delay °C									
143	11110001	IC2 SC/SH at time of abnormality delay °C									
144	00001001	IC3 SC/SH at time of abnormality delay °C									
145	10001001	IC4 SC/SH at time of abnormality delay °C									
146	01001001	IC5 SC/SH at time of abnormality delay °C									
147	11001001	IC1 TH21 Intake °F	-99.9 ~ 999.9 [°F] (When the indoor unit is not connected,it is displayed as"32".)								Display of detection data from each indoor thermistor
148	00101001	IC2 TH21 Intake °F									
149	10101001	IC3 TH21 Intake °F									
150	01101001	IC4 TH21 Intake °F									
151	11101001	IC5 TH21 Intake °F									
152	00011001	IC6 TH21 Intake °F									
153	10011001	IC7 TH21 Intake °F									
154	01011001	IC8 TH21 Intake °F									
155	11011001	IC1 TH23 Gas °F									
156	00111001	IC2 TH23 Gas °F									
157	10111001	IC3 TH23 Gas °F									
158	01111001	IC4 TH23 Gas °F									
159	11111001	IC5 TH23 Gas °F									
160	00000101	IC6 TH23 Gas °F									
161	10000101	IC7 TH23 Gas °F									
162	01000101	IC8 TH23 Gas °F									
170	01010101	ROM version monitor									Display of version data of ROM
171	11010101	ROM type									Display of ROM type
172	00110101	Check Sum code									Display of check sum code of ROM
173	10110101	IC1 TH22 Liquid °F	-99.9 ~ 999.9 [°F] (When the indoor unit is not connected,it is displayed as"32".)								Display of detection data from each indoor liquid pipe thermistor
174	01110101	IC2 TH22 Liquid °F									

No.	SW1 setting 12345678	Display mode	Display on the LED1, 2 (display data) 1	2	3	4	5	6	7	8	Notes
175	11110101	IC3 TH22 Liquid °F	-99.9 ~ 999.9 [°F] (When the indoor unit is not connected,it is displayed as"32".)								Display of detection data from each indoor liquid pipe thermistor
176	00001101	IC4 TH22 Liquid °F									
177	10001101	IC5 TH22 Liquid °F									
178	01001101	IC6 TH22 Liquid °F									
179	11001101	IC7 TH22 Liquid °F									
180	00101101	IC8 TH22 Liquid °F									
181	10101101	Primary heating control setting temp. a℃	-12℃≦a<b<c<d≦40℃ or a=c and b=d, -12℃≦a<d≦40℃ Initial value a= -12℃, b=0℃, c=10℃, d=20℃								Except Service Ref. PUMY-P48NHMU(-BS) Primary heating control: SW4-4 ON HD=05, CM=18 op1=00(℃)/01(°F) op2,op3=a op4,op5=b op6, op7=c op8,op9=d 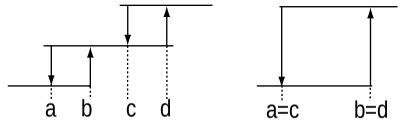 Ex. a=-5℃, b=5℃, c=15℃, d=25℃ SET : 05 18 00 80 05 00 05 00 15 00 25 MONI : 25 18 00
182	01101101	Primary heating control setting temp. b℃									
183	11101101	Primary heating control setting temp. c℃									
184	00011101	Primary heating control setting temp. d℃									
185	10011101	Primary heating control setting temp. a°F	10.4°F≦a<b<c<d≦104°F or a=c and b=d, 10.4°F≦a<d≦104°F Initial value a=10.4°F, b=32°F, c=50.0°F, d=68.0°F								
186	01011101	Primary heating control setting temp. b°F									
187	11011101	Primary heating control setting temp. c°F									
188	00111101	Primary heating control setting temp. d°F									
189	10111101	4220 Error history	—	—	ACTM error	—	—	CT sensor disconnection	Under voltage	Over voltage	
192	00000011	Actual frequency at time of abnormality									Display of actual frequency at time of abnormality
193	10000011	Fan step number at time of abnormality	0~FF(16progressive)								Display of fan step number at time of abnormality
195	11000011	IC1 LEV opening pulse at time of abnormality	0~20								Display of opening pulse of outdoor SLEV and indoor LEV at time of abnormality
196	00100011	IC2 LEV opening pulse at time of abnormality									
197	10100011	IC3 LEV opening pulse at time of abnormality	0~2000								
198	01100011	IC4 LEV opening pulse at time of abnormality									
199	11100011	IC5 LEV opening pulse at time of abnormality									
200	00010011	High-pressure sensor data at abnormality kgf/cm²	-99.9 ~ 999.9								Display of data from high-pressure sensor and all thermistors at time of abnormality
201	10010011	TH4 sensor data at time of abnormality °C									
202	01010011	TH6 sensor data at time of abnormality °C									
203	11010011	TH3 sensor data at time of abnormality °C									
204	00110011	TH8 sensor data at time of abnormality °C									
206	01110011	IC1 SC/SH at time of abnormality °C									Display of data from SC/SH and all thermistors at time of abnormality
207	11110011	IC2 SC/SH at time of abnormality °C									
208	00001011	IC3 SC/SH at time of abnormality °C									
209	10001011	IC4 SC/SH at time of abnormality °C									
210	01001011	IC5 SC/SH at time of abnormality °C									

No.	SW1 setting 12345678	Display mode	Display on the LED1, 2 (display data) 1	2	3	4	5	6	7	8	Notes
211	11001011	IC6 Capacity code	0~255								Display of indoor unit capacity mode
212	00101011	IC7 Capacity code									
213	10101011	IC8 Capacity code									
214	01101011	IC6 operation mode	OFF	Fan	Cooling thermo ON	Cooling thermo OFF	Heating thermo ON	Heating thermo OFF			Display of indoor unit operating mode
215	11101011	IC7 operation mode									
216	00011011	IC8 operation mode									
217	10011011	IC6 LEV opening pulse	0~2000								Display of opening pulse of outdoor SLEV and indoor LEV
218	01011011	IC7 LEV opening pulse									
219	11011011	IC8 LEV opening pulse									
220	00111011	IC6 TH23(Gas) °C	-99.9 ~ 999.9 (When the indoor unit is not connected,it is displayed as"0".)								Display of data from high-pressure sensor, all thermistors, and outdoor SC
221	10111011	IC7 TH23(Gas) °C									
222	01111011	IC8 TH23(Gas) °C									
223	11111011	IC6 TH22(Liquid) °C									
224	00000111	IC7 TH22(Liquid) °C									
225	10000111	IC8 TH22(Liquid) °C									
226	01000111	IC6 TH21(Intake) °C									
227	11000111	IC7 TH21(Intake) °C									
228	00100111	IC8 TH21(Intake) °C									
229	10100111	IC6 SC/SH °C	-99.9 ~ 999.9 during heating:subcool (SC)/during cooling:superheat (SH)								Display of indoor SC/SH data
230	01100111	IC7 SC/SH °C									
231	11100111	IC8 SC/SH °C									
232	00010111	IC6 target SC/SH °C	SCm/SHm (0.0~14.0)								Display of all control target data
233	10010111	IC7 target SC/SH °C									
234	01010111	IC8 target SC/SH °C									
235	11010111	IC6 LEV opening pulse at abnormality delay	0~2000								Display of opening pulse of indoor LEV at time of abnormality
236	00110111	IC7 LEV opening pulse at abnormality delay									
237	10110111	IC8 LEV opening pulse at abnormality delay									
238	01110111	IC6 SC/SH at abnormality delay °C	-99.9 ~ 999.9								Display of SC/ SH data at time of abnormality
239	11110111	IC7 SC/SH at abnormality delay °C									
240	00001111	IC8 SC/SH at abnormality delay °C									
241	10001111	IC6 LEV opening pulse at time of abnormality	0~2000								Display of opening pulse of indoor LEV at time of abnormality
242	01001111	IC7 LEV opening pulse at time of abnormality									
243	11001111	IC8 LEV opening pulse at time of abnormality									
244	00101111	IC6 SC/SH at abnormality °C	-99.9 ~ 999.9								Display of SC/ SH data at time of abnormality
245	10101111	IC7 SC/SH at abnormality °C									
246	01101111	IC8 SC/SH at abnormality °C									

10 ELECTRICAL WIRING

This chapter provides an introduction to electrical wiring for the CITY MULTI-S series, together with notes concerning power wiring, wiring for control (transmission wires and remote controller wires), and the frequency converter.

10-1. OVERVIEW OF POWER WIRING

(1) Use a separate power supply for the outdoor unit and indoor unit.
(2) Bear in mind ambient conditions (ambient temperature, direct sunlight, rain water,etc.) when proceeding with the wiring and connections.
(3) The wire size is the minimum value for metal conduit wiring. The power cord size should be 1 rank thicker consideration of voltage drops. Make sure the power-supply voltage does not drop more than 10 %.
(4) Specific wiring requirements should adhere to the wiring regulations of the region.
(5) Power supply cords of parts of appliances for outdoor use shall not be lighter than polychloroprene sheathed flexible cord. For example, use wiring such as YZW.
(6) Install an earth longer than other cables.
(7) Use copper supply wires. Use electric wires over the rating voltage 300V.

⚠ Warning:
- Be sure to use specified wires to connect so that no external force is imparted to terminal connections. If connections are not fixed firmly, it may cause heating or fire.
- Be sure to use the appropriate type of overcurrent protection switch. Note that generated overcurrent may include some amount of direct current.

⚠ Caution:
- Some installation site may require attachment of an earth leakage breaker. If no earth leakage breaker is installed, it may cause an electric shock.
- Do not use anything other than breaker and fuse with correct capacity. Using fuse and wire or copper wire with too large capacity may cause a malfunction of unit or fire.

10-2. WIRE DIAMETER AND MAIN POWER SWITCH CAPACITY

10-2-1. Wiring diagram for main power supply

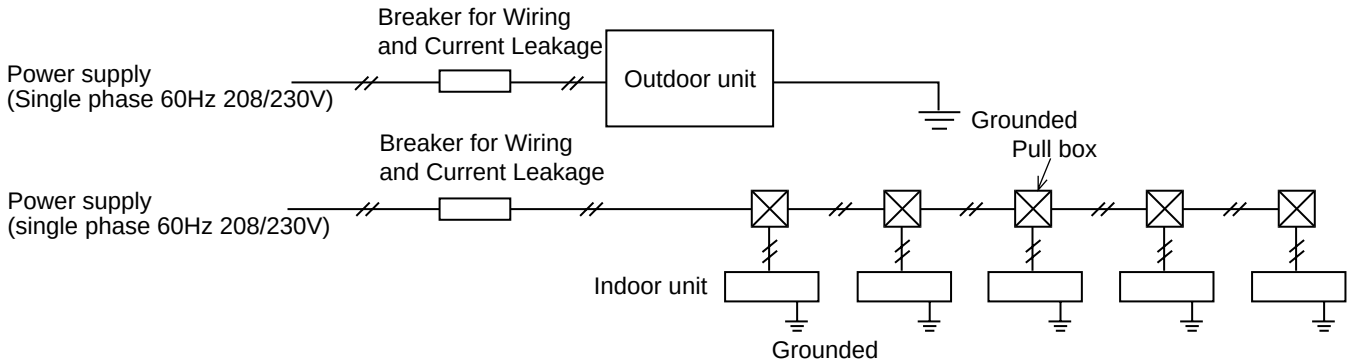

10-2-2. Power supply wire diameter and capacity

Model		Power Supply	Minimum Wire Thickness (mm^2[AWG])		Breaker for Wiring*1	Breaker for Current Leakage	Minimum circuit ampacity	Maximum rating of over current protector device
			Main Cable*2	Ground				
Outdoor Unit	P36, P48	~/N (single), 60Hz 208/230V	5.3 [AWG10]	5.3 [AWG10]	30 A	30 A 30 mA 0.1 sec. or less	26 A	40 A
Indoor Unit		~/N (single), 60Hz 208/230V	Refer to installation manual of indoor unit.					

*1. A breaker with at least 3.0mm contact separation in each poles shall be provided. Use earth leakage breaker (NV).
*2. Use copper supply wires. Use the electric wires over the rating voltage 300V.

10-3. DESIGN FOR CONTROL WIRING

Please note that the types and numbers of control wires needed by the CITY MULTI-S series will depend on the remote controllers and whether they are linked with the system.

10-3-1. Selection number of control wires

		M-NET remote controller
Use		Remote controller used in system control operations. • Group operation involving different refrigerant systems. • Linked operation with upper control system.
Transmission wires	Remote controller → indoor unit	2 wires (non-polar)
	Wires connecting → indoor units	
	Wires connecting → indoor units with outdoor unit	
	Wires connecting → outdoor units	

10-3-2. Control signal wires

● Transmission wires

• Types of transmission cables : Shielding wire CVVS or CPEVS.
• Cable diameter : More than 1.25㎟ [AWG 16]
• Maximum wiring length : Within 200 m [656 ft]

10-3-3. M-NET Remote controller wiring

Kind of remote control cable	Shielding wire MVVS
Cable diameter	0.5 to 1.25㎟ [AWG 20 to AWG 16]
Remarks	When 10m is exceeded, use cable with the same specifications as 10-3-2. Transmission line wiring

10-3-4. MA Remote control cables

Kind of remote control cable	2-core cable (unshielded)
Cable diameter	0.3 to 1.25 ㎟ [AWG 22 to AWG 16]

10-4. SYSTEM SWITCH SETTING

In order to identify the destinations of signals to the outdoor units, indoor units, and remote controller of the MULTI-S series, each microprocessor must be assigned an identification number (address). The addresses of outdoor units, indoor units, and remote controller must be set using their settings switches. Please consult the installation manual that comes with each unit for detailed information on setting procedures.

10-5. EXAMPLE EXTERNAL WIRING DIAGRAM FOR A BASIC SYSTEM

10-5-1. Example using a M-NET remote controller

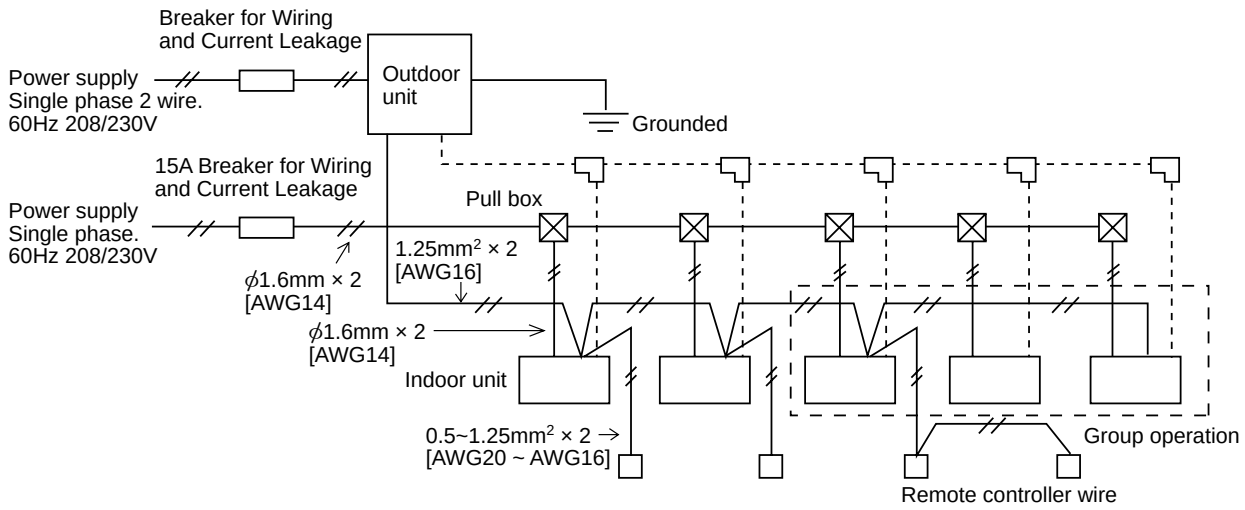

10-6. METHOD FOR OBTAINING ELECTRICAL CHARACTERISTICS WHEN A CAPACITY AGREEMENT IS TO BE SIGNED WITH AN ELECTRIC POWER COMPANY

The electrical characteristics of connected indoor unit system for air conditioning systems, including the MULTI-S series, will depend on the arrangement of the indoor and outdoor units.
First read the data on the selected indoor and outdoor units and then use the following formulas to calculate the electrical characteristics before applying for a capacity agreement with the local electric power company.

10-6-1. Obtaining the electrical characteristics of a CITY MULTI-S series system

(1)Procedure for obtaining total power consumption

	Page numbers in this technical manual	Power consumption
Total power consumption of each indoor unit	See the technical manual of each indoor unit	①
*1 power consumption of outdoor unit	Standard capacity table— Refer to 5-2.	②
Total power consumption of system	See the technical manual of each indoor unit	①+② <kW>

*1 Please note that the power consumption of the outdoor unit will vary depending on the total capacity of the selected indoor units.

(2)Method of obtaining total current

	Page numbers in this technical manual	Subtotal
Total current through each indoor unit	See the technical manual of each indoor unit	①
*2 current through outdoor unit	Standard capacity table— Refer to 5-2.	②
Total current through system	See the technical manual of each indoor unit	①+② <A>

*2 Please note that the current through the outdoor unit will vary depending on the total capacity of the selected indoor units.

(3) Method of obtaining system power factor

Use the following formula and the total power and current obtained in parts ① and ② in the above table to calculate the system power factor.

$$\text{System power factor} = \frac{\text{(Total system power consumption)}}{\text{(Total system current x voltage)}} \times 100\%$$

10-6-2. Applying to an electric power company for power and total current

Calculations should be performed separately for heating and cooling employing the same methods; use the largest resulting value in your application to the electric power company.

11 REFRIGERANT PIPING TASKS

11-1. REFRIGERANT PIPING SYSTEM

Line-Branch Method
Connection Examples
(Connecting to 4 Indoor Units)

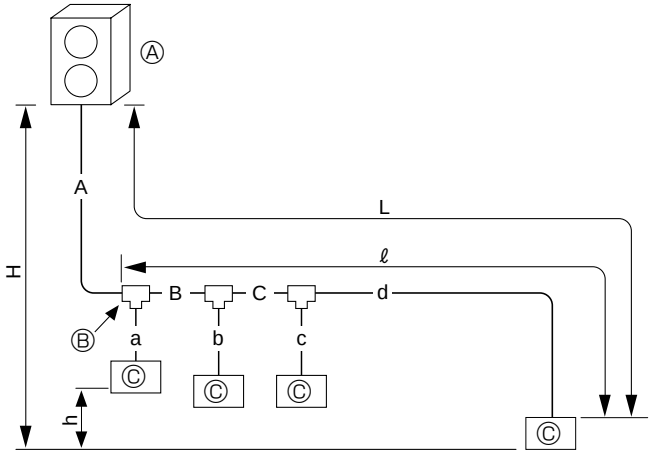

Ⓐ Outdoor Unit
Ⓑ First Branch
Ⓒ Indoor unit

Permissible Length	Total Piping Length	A+B+C+a+b+c+d≦ 120m [394ft]
	Farthest Piping Length (L)	A+B+C+d ≦ 80m [262ft]
	Farthest Piping Length After First Branch (ℓ)	B+C+d ≦ 30m [100ft]
Permissible High/ Low Difference	High/Low Difference in Indoor/Outdoor Section (H)	30 meters [100ft] or less (If the outdoor unit is lower, 20 meters [70ft] or less)
	High/Low Difference in Indoor/Indoor Section (h)	12 meters [39ft] or less

■ **Selecting the Refrigerant Branch Kit**

Use an optional branch piping kit (CMY-Y62-G-E).

■ **Select Each Section of Refrigerant Piping**

(1) Section From Oudoor Unit to First Branch (A)
(2) Sections From Branch to Indoor Unit (a,b,c,d)
(3) Section From Branch to Branch (B,C)

Select the size from the right table.

(1) Refrigerant Piping Diameter In Section From Outdoor Unit to First Branch (Outdoor Unit Piping Diameter)

Model	Piping Diameter (mm [inch])	
PUMY-P36,48	Liquid Line	ϕ9.52 [3/8]
	Gas Line	ϕ15.88 [5/8]

(2) Refrigerant Piping Diameter In Section From Branch to Indoor Unit (Indoor Unit Piping Diameter)

Model number	Piping Diameter (mm [inch])	
18 or lower	Liquid Line	ϕ6.35 [1/4]
	Gas Line	ϕ12.7 [1/2]
24 to 54	Liquid Line	ϕ9.52 [3/8]
	Gas Line	ϕ15.88 [5/8]

(3) Refrigerant Piping Diameter In Section From Branch to Branch

Liquid Line (mm [inch])	Gas Line (mm [inch])
ϕ9.52 [3/8]	ϕ15.88 [5/8]

■ **Additional refrigerant charge**

- Refrigerant of 3kg [6.6 lbs] equivalent to 50m [165 ft] total extended piping length is already included when the outdoor unit is shipped. Thus, if the total extended piping length is 50m [165 ft] or less, there is no need to charge with additional refrigerant.
- If the total extended piping length exceeds 50m [165 ft], calculate the required additional refrigerant charge using the procedure shown on the right.
- If the calculated additional refrigerant charge is a negative amount, do not charge with any refrigerant.

<Additional Charge>

Additional refrigerant charge	=	Liquid pipe size Total length of ϕ9.52 × 0.06 kg [3/8" × 0.041 lbs]	+	Liquid pipe size Total length of ϕ6.35 × 0.024 kg [1/4" × 0.016 lbs]	–	Refrigerant amount for outdoor unit
(kg) [lbs]		(m) × 0.06 (kg/m), [ft] × 0.041 [lbs/ft]		(m) × 0.024 (kg/m), [ft] × 0.016 [lbs/ft]		3.0kg [6.6 lbs]

<Example>
Outdoor model : P48
Indoor

1 : P24	A : ϕ9.52 [3/8"] 10 m [33 ft]	a : ϕ9.52 [3/8"]	15m [49 ft]
2 : P15	B : ϕ9.52 [3/8"] 10 m [33 ft]	b : ϕ6.35 [1/4"]	10m [33 ft]
3 : P08	C : ϕ9.52 [3/8"] 10 m [33 ft]	c : ϕ6.35 [1/4"]	10m [33 ft]
4 : P06		d : ϕ6.35 [1/4"]	20m [66 ft]

At the conditions below:

The total length of each liquid line is as follows;
ϕ9.52 [3/8"] : A + B + C + a = 10 m + 10 m + 10 m + 15 m = 45 m [33 ft + 33 ft + 33 ft + 49 ft = 148 ft]
ϕ6.35 [1/4"] : b + c + d = 10 m +10 m + 20 m = 40 m [33 ft + 33 ft + 66 ft = 132 ft]
<Calculation example>
Additional
refrigerant charge = 45 m × 0.06 kg + 40 m × 0.024 kg – 3.0 kg = 0.7kg (rounded up)
= [148 ft × 0.041 lbs + 132 ft × 0.016 lbs – 6.6 lbs = 1.58 lbs]

Header-Branch Method
Connection Examples
(Connecting to 4 Indoor Units)

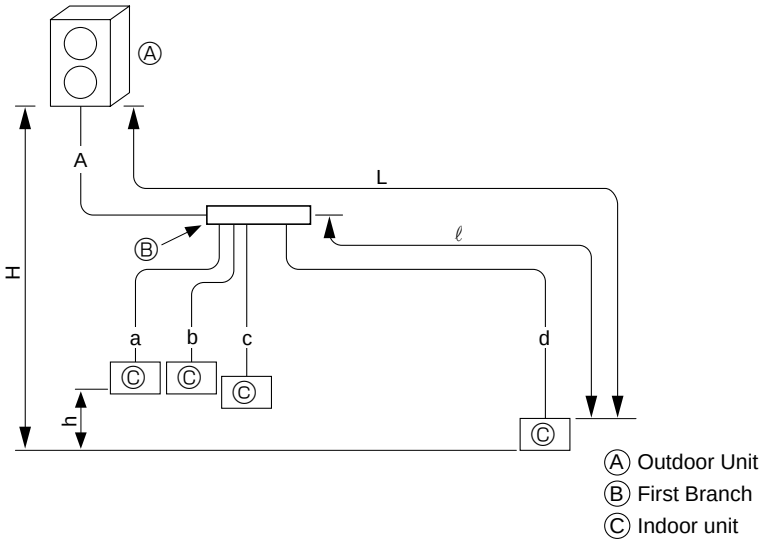

Permissible Length	Total Piping Length	A+a+b+c+d ≦ 120m [394 ft]
	Farthest Piping Length (L)	A+d ≦ 80m [262 ft]
	Farthest Piping Length After First Branch (ℓ)	d is 30 meters[100 ft] or less
Permissible High/Low Difference	High/Low Difference in Indoor/Outdoor Section (H)	30 meters [100 ft] or less (If the outdoor unit is lower, 20 meters [70 ft] or less)
	High/Low Difference in Indoor/Indoor Section (h)	12 meters [39 ft] or less

■ **Selecting the Refrigerant Branch Kit**

Please select branching kit, which is sold separately, from the table below.
(The kit comprises sets for use with liquid pipes and for use with gas pipes.)

Branch header (4 branches)	Branch header (8 branches)
CMY-Y64-G-E	CMY-Y68-G-E

■ **Select Each Section of Refrigerant Piping**

(1) Section From Outdoor Unit to First Branch (A)
(2) Sections From Branch to Indoor Unit (a,b,c,d)

Select the size from the right table.

(1) Refrigerant Piping Diameter In Section From Outdoor Unit to First Branch (Outdoor Unit Piping Diameter)

Model	Piping Diameter (mm [inch])	
PUMY-P36,48	Liquid Line	ϕ9.52 [3/8]
	Gas Line	ϕ15.88 [5/8]

(2) Refrigerant Piping Diameter In Section From Branch to Indoor Unit (Indoor Unit Piping Diameter)

Model number	Piping Diameter (mm [inch])	
18 or lower	Liquid Line	ϕ6.35 [1/4]
	Gas Line	ϕ12.7 [1/2]
24 to 54	Liquid Line	ϕ9.52 [3/8]
	Gas Line	ϕ15.88 [5/8]

■ **Additional refrigerant charge**

- Refrigerant of 3kg [6.6 lbs] equivalent to 50m [165 ft] total extended piping length is already included when the outdoor unit is shipped.
  Thus, if the total extended piping length is 50m [165 ft] or less, there is no need to charge with additional refrigerant.
- If the total extended piping length exceeds 50m [165 ft], calculate the required additional refrigerant charge using the procedure shown on the right.
- If the calculated additional refrigerant charge is a negative amount, do not charge with any refrigerant.

<Additional Charge>

Additional refrigerant charge	=	Liquid pipe size Total length of ϕ9.52 × 0.06 kg [3/8" × 0.041 lbs]	+	Liquid pipe size Total length of ϕ6.35 × 0.024 kg [1/4" × 0.016 lbs]	–	Refrigerant amount for outdoor unit
(kg) [lbs]		(m) × 0.06 (kg/m), [ft] × 0.041 [lbs/ft]		(m) × 0.024 (kg/m), [ft] × 0.016 [lbs/ft]		3.0kg [6.6 lbs]

<Example>
Outdoor model : P48
Indoor
1 : P24 A : ϕ9.52 [3/8"] 30 m [98ft] a : ϕ9.52 [3/8"] 15m [49ft]
2 : P15 b : ϕ6.35 [1/4"] 10m [33 ft]
3 : P08 c : ϕ6.35 [1/4"] 10m [33 ft]
4 : P06 d : ϕ6.35 [1/4"] 20m [66 ft]
} At the conditions below:

The total length of each liquid line is as follows;
ϕ9.52 : A + a = 30 m + 15 m = 45 m [98 ft + 49 ft = 147 ft]
ϕ6.35 : b + c + d = 10 m + 10 m + 20 m = 40 m [33 ft + 33 ft + 66 ft = 132 ft]
<Calculation example>
Additional
refrigerant charge = 45 m × 0.06 kg + 40 m × 0.024 kg – 3.0 kg = 0.7kg (rounded up)
= [147 ft × 0.041 lbs + 132 ft × 0.016 lbs – 6.6 lbs = 1.54 lbs]

Method of Combined Branching of Lines and Headers
Connection Examples
(Connecting to 5 Indoor Units)

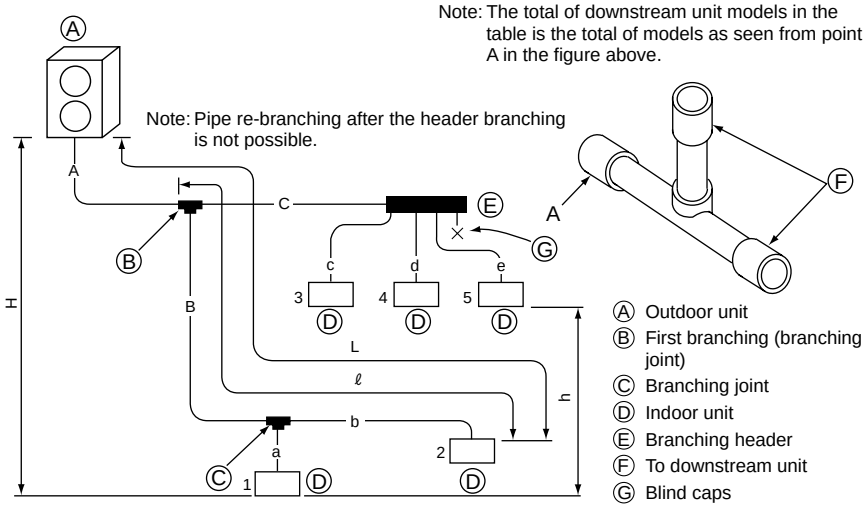

Permissible Length	Total Piping Length	A+B+C+a+b+c+d+e is 120 meters [394 ft] or less
	Farthest Piping Length (L)	A+B+b is 80 meters [262 ft] or less
	Farthest Piping Length After First Branch (ℓ)	B+b is 30 meters [100 ft] or less
Permissible High/Low Difference	High/Low Difference in Indoor/Outdoor Section (H)	30 meters [100 ft] or less (If the outdoor unit is lower, 20 meters [70 ft] or less)
	High/Low Difference in Indoor/Indoor Section (h)	12 meters [39 ft] or less

■ **Selecting the Refrigerant Branch Kit**

Please select branching kit, which is sold separately, from the table below.
(The kit comprises sets for use with liquid pipes and for use with gas pipes.)

Branch Joint	Branch Header (4 branches)	Branch Header (8 branches)
CMY-Y62-G-E	CMY-Y64-G-E	CMY-Y68-G-E

■ **Select Each Section of Refrigerant Piping**

(1) Section From Outdoor Unit to First Branch (A)
(2) Sections From Branch to Indoor Unit (a,b,c,d,e)
(3) Section From Branch to Branch (B,C)

Select the size from the right table.

(1) Refrigerant Piping Diameter In Section From Outdoor Unit to First Branch (Outdoor Unit Piping Diameter)

Model	Piping Diameter (mm [inch])	
PUMY-P36, 48	Liquid Line	ϕ9.52 [3/8]
	Gas Line	ϕ15.88 [5/8]

(2) Refrigerant Piping Diameter In Section From Branch to Indoor Unit (Indoor Unit Piping Diameter)

Model number	Piping Diameter (mm [inch])	
18 or lower	Liquid Line	ϕ6.35 [1/4]
	Gas Line	ϕ12.7 [1/2]
24 to 54	Liquid Line	ϕ9.52 [3/8]
	Gas Line	ϕ15.88 [5/8]

(3) Refrigerant Piping Diameter In Section From Branch to Branch

Liquid Line (mm [inch])	Gas Line (mm [inch])
ϕ9.52 [3/8]	ϕ15.88 [5/8]

■ **Additional refrigerant charge**

- Refrigerant of 3kg [6.6 lbs] equivalent to 50m [165 ft] total extended piping length is already included when the outdoor unit is shipped.
  Thus, if the total extended piping length is 50m [165 ft] or less, there is no need to charge with additional refrigerant.
- If the total extended piping length exceeds 50m [165 ft], calculate the required additional refrigerant charge using theprocedure shown on the right.
- If the calculated additional refrigerant charge is a negative amount, do not charge with any refrigerant.

<Additional Charge>

Additional refrigerant charge	=	Liquid pipe size Total length of ϕ9.52 × 0.06 kg [3/8" × 0.041 lbs]	+	Liquid pipe size Total length of ϕ6.35 × 0.024 kg [1/4" × 0.016 lbs]	–	Refrigerant amount for outdoor unit
(kg) [lbs]		(m) × 0.06 (kg/m), [ft] × 0.041 [lbs/ft]		(m) × 0.024 (kg/m), [ft] × 0.016 [lbs/ft]		3.0kg [6.6 lbs]

<Example>
Outdoor model : P48
Indoor

1 : P24	A : ϕ9.52 [3/8"] 10 m [33 ft]	a : ϕ9.52 [3/8"]	15m [49 ft]	At the conditions below:
2 : P15	B : ϕ9.52 [3/8"] 10 m [33 ft]	b : ϕ6.35 [1/4"]	10m [33 ft]	
3 : P08	C : ϕ9.52 [3/8"] 10 m [33 ft]	c : ϕ6.35 [1/4"]	10m [33 ft]	
4 : P06		d : ϕ6.35 [1/4"]	10m [33 ft]	
5 : P06		e : ϕ6.35 [1/4"]	10m [33 ft]	

The total length of each liquid line is as follows;
ϕ9.52 : A + B + C + a = 10 m + 10 m + 10 m + 15 m = 45 m [33 ft + 33 ft + 33 ft + 49 ft = 148 ft]
ϕ6.35 : b + c + d + e = 10 m + 10 m + 10 m + 10 m = 40 m [33 ft + 33 ft + 33 ft + 33 ft = 132 ft]
<Calculation example>
Additional
refrigerant charge = 45 m × 0.06 kg + 40 m × 0.024 kg – 3.0 kg = 0.7kg (rounded up)
= [148 ft × 0.041 lbs + 132 ft × 0.016 lbs – 6.6 lbs = 1.58 lbs]

11-2. PRECAUTIONS AGAINST REFRIGERANT LEAKAGE

The installer and system specialist shall secure safety against leakage according to local regulations or standards. The following standards may be applicable if local regulations are not available.

11-2-1. Introduction

R410A refrigerant of this air conditioner is non-toxic and non-flammable but leaking of large amount from an indoor unit into the room where the unit is installed may be deleterious.
To prevent possible injury, the rooms should be large enough to keep the R410A concentration specified by KHK : (a high pressure gas safety association) installation guidelines S0010 as follows.

* Maximum concentration
Maximum refrigerant concentration of R410A of a room is 0.30 kg/m³ accordance with the installation guidelines. To facilitate calculation, the maximum concentration is expressed in units of kg/m³ (kg of R410A per m³)

Maximum concentration of R410A: 0.3kg/m³[0.019lbs/ft³]

(KHK installation guidelines S0010)

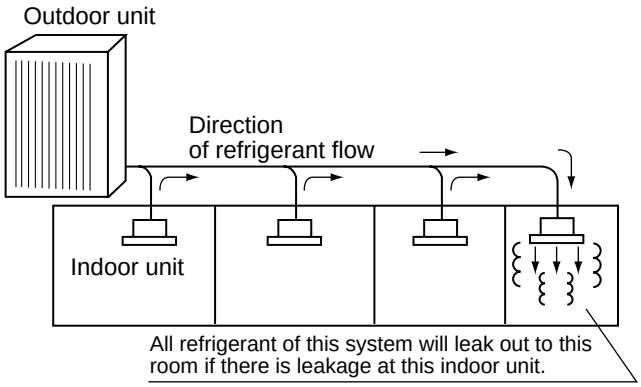

11-2-2. Confirming procedure of R410A concentration

Follow (1) to (3) to confirm the R410A concentration and take appropriate treatment, if necessary.

(1) Calculate total refrigerant amount by each refrigerant system.
Total refrigerant amount is precharged refrigerant amount at ex-factory plus additional charged amount at field installation.

Note:
When single refrigeration system is consists of several independent refrigeration circuit, figure out the total refrigerant amount by each independent refrigerant circuit.

(2) Calculate room volumes (m³[ft³]) and find the room with the smallest volume

The part with ▭ represents the room with the smallest volume.

(a) Situation in which there are no partitions

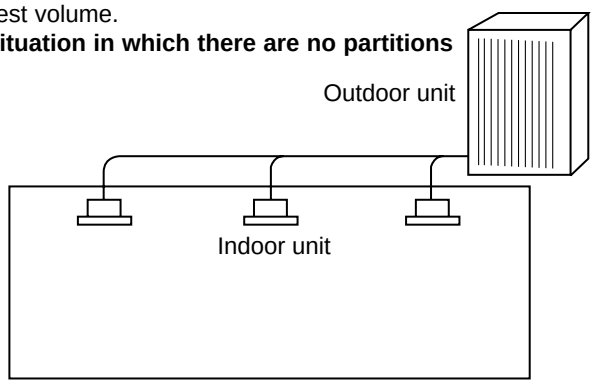

(b) There are partitions, but there are openings that allow the effective mixing of air.

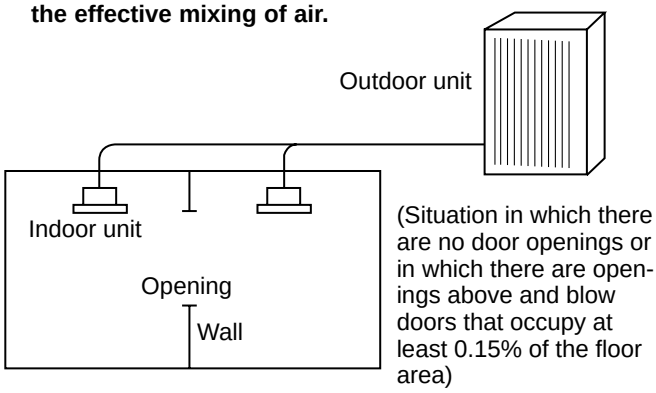

(c) If the smallest room has mechanical ventilation apparatus that is linked to a household gas detection and alarm device, the calculations should be performed for the second smallest room.

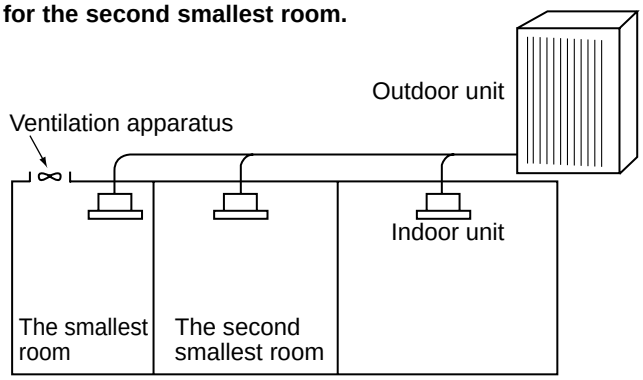

(3) Use the results of calculations (1)and (2) to calculate the refrigerant concentration:

$$\frac{\text{Total refrigerant in the refrigerating unit (kg[lbs])}}{\text{The smallest room in which an indoor unit has been installed (m}^3\text{[ft}^3\text{])}} \leqq \text{maximum concentration (kg/m}^3\text{[lbs/ft}^3\text{])}$$

Maximum concentration of R410A:0.3kg/m³[0.019lbs/ft³]

If the calculation results do not exceed the maximum concentration, perform the same calculations for the larger second and third room, etc., until it has been determined that nowhere will the maximum concentration be exceeded.

12 DISASSEMBLY PROCEDURE

OUTDOOR UNIT : PUMY-P36NHMU(-BS) PUMY-P48NHMU(-BS)
PUMY-P48NHMU$_1$(-BS) PUMY-P48NHMU$_2$(-BS)

OPERATING PROCEDURE	PHOTOS & ILLUSTRATION
1. Removing the service panel and top panel (1) Remove 3 service panel fixing screws (5 × 10) and slide the hook on the right downward to remove the service panel. (2) Remove screws (3 for front, 3 for rear/5 × 10) of the top panel and remove it.	**Figure 1** 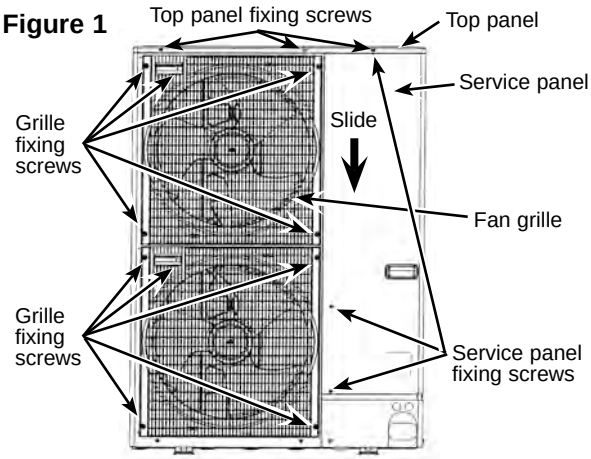
2. Removing the fan motor (MF1, MF2) (1) Remove the service panel. (See figure 1.) (2) Remove the top panel. (See figure 1.) (3) Remove 5 fan grille fixing screws (5 × 10) to detach the fan grille. (See figure 1.) (4) Remove a nut (for right handed screw of M6) to detach the propeller. (See photo 1.) (5) Disconnect the connectors, CNF1 and CNF2 on Multi controller board in electrical parts box. (6) Remove 4 fan motor fixing screws (5 × 25) to detach the fan motor. (See photo 2.)	**Photo 1** **Photo 2** 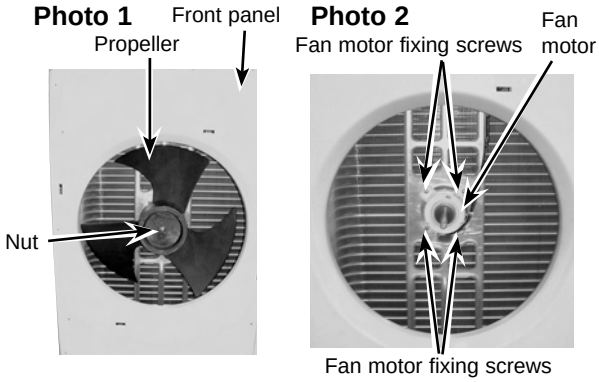
3. Removing the electrical parts box (1) Remove the service panel. (See figure 1.) (2) Remove the top panel. (See figure 1.) (3) Disconnect the connecting wire from terminal block. (4) Remove all the following connectors from Multi controller board; fan motor, thermistor <Outdoor pipe>, thermistor <Discharge>, thermistor <Low pressure saturated temp>, thermistor <Outdoor>, high pressure switch, high pressure sensor, low pressure switch, 4-way valve coil and bypass valve coil. Pull out the disconnected wire from the electrical parts box. <Diagram symbol in the connector housing> • Fan motor (CNF1, CNF2) • Thermistor <Outdoor pipe> (TH3) • Thermistor <Discharge> (TH4) • Thermistor <Low pressure saturated temp, Outdoor> (TH6/7) • High pressure switch (63H) • High pressure sensor (63HS) • Low pressure switch (63L) • Solenoid valve coil <Four-way valve> (21S4) • Solenoid valve coil <Bypass valve> (SV1) (5) Remove the terminal cover and disconnect the compressor lead wire.	**Photo 3** 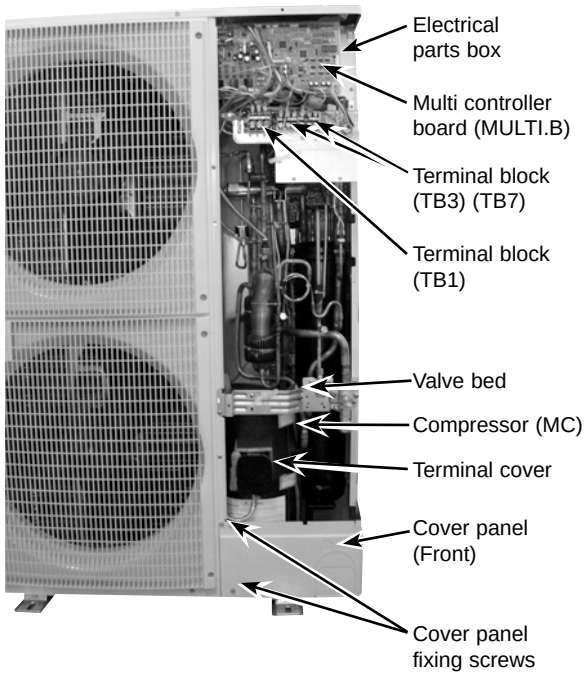

Continued to the next page.

From the previous page.

OPERATING PROCEDURE	PHOTOS & ILLUSTRATION
(6) Remove electrical parts box fixing screw (4 × 10) and detach the electrical parts box by pulling it upward. The electrical parts box is fixed with 2 hooks on the left and 1 hook on the right.	**Photo 4** 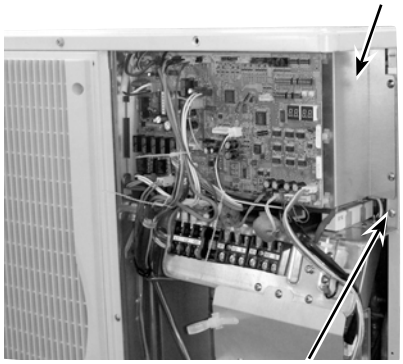
4. Removing the thermistor <Low pressure saturated temp.> (TH6) (1) Remove the service panel. (See figure 1.) (2) Remove the top panel. (See figure 1.) (3) Disconnect the connectors, TH6 and TH7 (red), on the Multi controller board in the electrical parts box. (4) Loosen the wire clamps on top of the electrical parts box. (5) Pull out the thermistor <Low pressure saturated temp.> (TH6) from the sensor holder. **Note: In case of replacing thermistor <Low pressure saturated temp.> (TH6), replace it together with thermistor <Outdoor> (TH7) since they are combined together.** **Refer to No.5 below to remove thermistor <Outdoor>.**	**Photo 5** 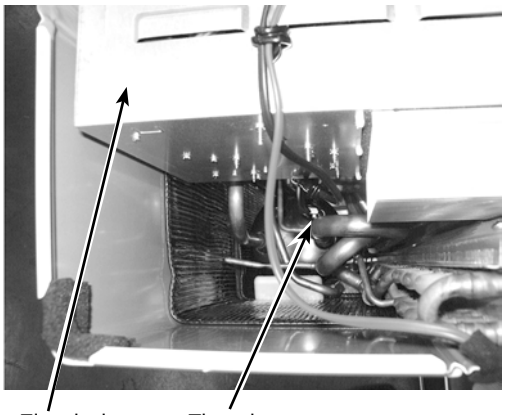
5. Removing the thermistor <Outdoor> (TH7) (1) Remove the service panel. (See figure 1.) (2) Remove the top panel. (See figure 1.) (3) Disconnect the connector TH7 (red) on the Multi controller board in the electrical parts box. (4) Loosen the wire clamps on top of the electrical parts box. (See photo 4.) (5) Pull out the thermistor <Outdoor> (TH7) from the sensor holder. **Note: In case of replacing thermistor <Outdoor> (TH7), replace it together with thermistor <Low pressure saturated temp> (TH6), since they are combined together.** **Refer to No.4 above to remove thermistor <Low pressure saturated temp>.**	**Photo 6** **PUMY-P48NHMU(1)** 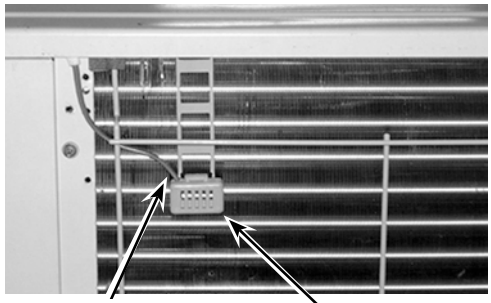 **PUMY-P36NHMU/P48NHMU2** 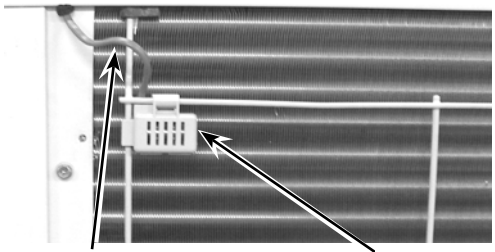

OPERATING PROCEDURE	PHOTOS
6. Removing the thermistor <Outdoor pipe> (TH3) and thermistor <Discharge> (TH4) (1) Remove the service panel. (See figure 1.) (2) Disconnect the connectors, TH3 (white) and TH4 (white), on the Multi controller board in the electrical parts box. (3) Loosen the clamp for the lead wire in the rear of the electrical parts box. (4) Pull out the thermistor <Outdoor pipe> (TH3) and thermistor <Discharge> (TH4) from the sensor holder.	**Photo 7** 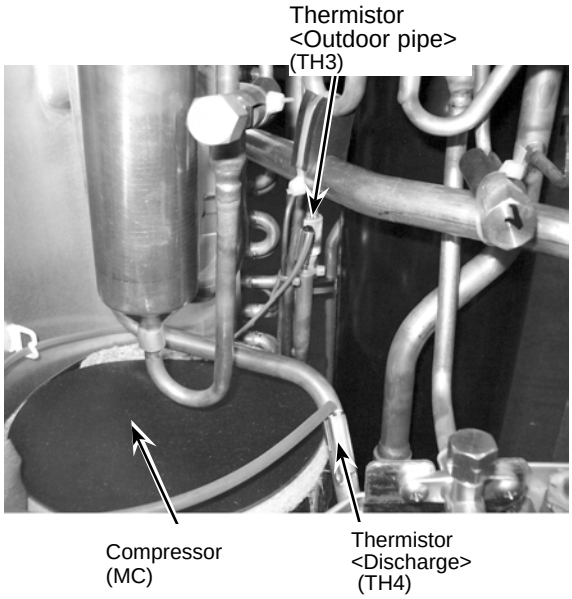
7. Removing the 4-way valve coil (21S4) (1) Remove the service panel. (See figure 1.) (2) Remove the top panel. (See figure 1.) **[Removing the 4-way valve coil]** (3) Remove 4-way valve solenoid coil fixing screw (M4 × 6). (4) Remove the 4-way valve coil by sliding the coil toward you. (5) Disconnect the connector 21S4 (green) on the Multi controller board in the electrical parts box.	**Photo 8** 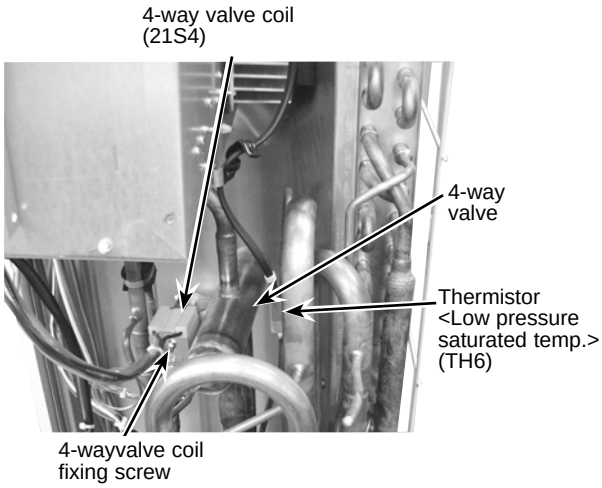
8. Removing the 4-way valve (1) Remove the service panel. (See figure 1.) (2) Remove the top panel. (See figure 1.) (3) Remove 3 valve bed fixing screws (4 × 10) and 4 ball valve and stop valve fixing screws (5 × 16) and then remove the valve bed. (4) Remove 4 right side panel fixing screw (5 × 10) in the rear of the unit and then remove the right side panel. (5) Remove the 4-way valve coil.(See photo 8.) (6) Recover refrigerant. (7) Remove the welded part of 4-way valve. **Note 1: Recover refrigerant without spreading it in the air.** **Note 2: The welded part can be removed easily by removing the right side panel.** **Note 3: When installing the 4-way valve, cover it with a wet cloth to prevent it from heating (120°C [248°F] or more), then braze the pipes so that the inside of pipes are not oxidized.**	

OPERATING PROCEDURE	PHOTOS
9. Removing bypass valve coil(SV1) and bypass valve (1) Remove the service panel. (See figure 1.) (2) Remove the top panel. (See figure 1.) (3) Remove 3 right side panel fixing screws (5 × 10) in the rear of the unit and remove the right side panel. (4) Remove the bypass valve coil fixing screw (M4 × 6). (5) Remove the bypass valve coil by sliding the coil upward. (6) Disconnect the connector SV1 (white) on the Multi controller circuit board in the electrical parts box. (7) Recover refrigerant. (8) Remove the welded part of bypass valve. **Note 1: Recover refrigerant without spreading it in the air.** **Note 2: The welded part can be removed easily by removing the right side panel.**	**Photo 9** 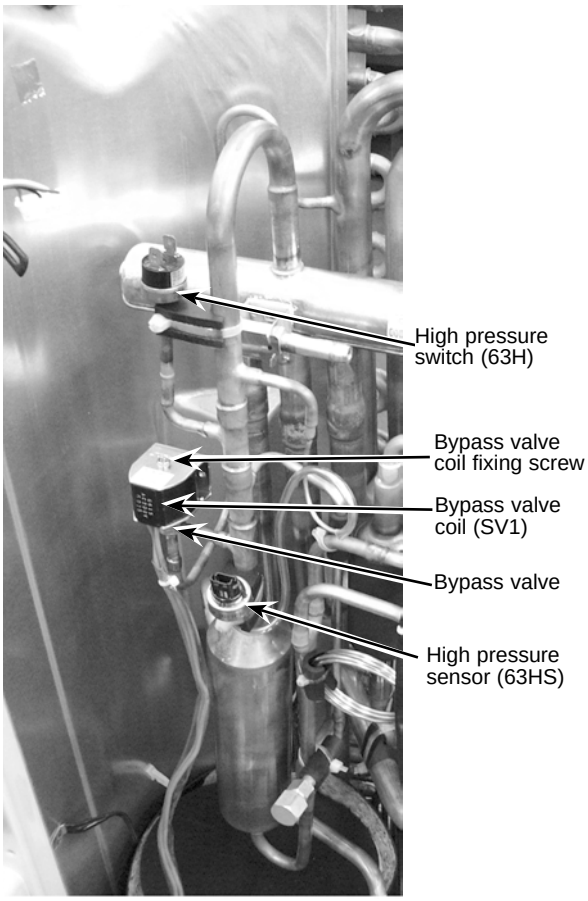
10. Removing the high pressure switch (63H) and low pressure switch (63L) (1) Remove the service panel. (See figure 1.) (2) Remove the top panel. (See figure 1.) (3) Remove the electrical parts box. (See photo 4.) (4) Remove 3 right side panel fixing screws (5 × 10) in the rear of the unit and remove the right side panel. (5) Pull out the lead wire of high pressure switch and low pressure switch. (6) Recover refrigerant. (7) Remove the welded part of high pressure switch and low pressure switch. **Note 1: Recover refrigerant without spreading it in the air.** **Note 2: The welded part can be removed easily by removing the right side panel.** **Note 3: When installing the high pressure switch and low pressure switch, cover them with a wet cloth to prevent them from heating (100°C [212°F] or more), then braze the pipes so that the inside of pipes are not oxidized.**	**Photo 10** 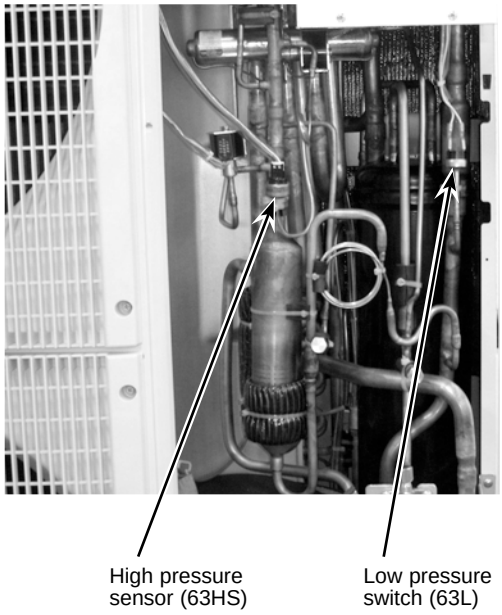
11. Removing the high pressure sensor (63HS) (1) Remove the service panel. (See figure 1.) (2) Remove the top panel. (See figure 1.) (3) Remove the electrical parts box. (See photo 4.) (4) Remove 3 right side panel fixing screws (5 × 10) in the rear of the unit and remove the right side panel. (5) Pull out the lead wire of high pressure sensor. (6) Recover refrigerant. (7) Remove the welded part of high pressure sensor. **Note 1: Recover refrigerant without spreading it in the air.** **Note 2: The welded part can be removed easily by removing the right side panel.** **Note 3: When installing the high pressure sensor, cover it with a wet cloth to prevent it from heating (100°C [212°F] or more), then braze the pipes so that the inside of pipes are not oxidized.**	

OPERATING PROCEDURE	PHOTOS
12. Removing the compressor (MC) (1) Remove the service panel. (See figure 1.) (2) Remove the top panel. (See figure 1.) (3) Remove 2 front cover panel fixing screws (5 × 10) and remove the front cover panel. (See photo 3.) (4) Remove 2 back cover panel fixing screws (5 × 10) and remove the back cover panel. (5) Remove the electrical parts box. (See photo 3.) (6) Remove 3 valve bed fixing screws (4 × 10) and 4 ball valve and stop valve fixing screws (5 × 16) and then remove the valve bed. (7) Remove 3 right side panel fixing screw (5 × 10) in the rear of the unit and then remove the right side panel. (8) Remove 3 separator fixing screws (4 × 10) and remove the separator. (9) Recover refrigerant. (10) Remove the 3 points of the motor for compressor fixing nut using a spanner or a monkey wrench. (11) Remove the welded pipe of motor for compressor inlet and outlet and then remove the compressor. **Note: Recover refrigerant without spreading it in the air.**	**Photo 11** 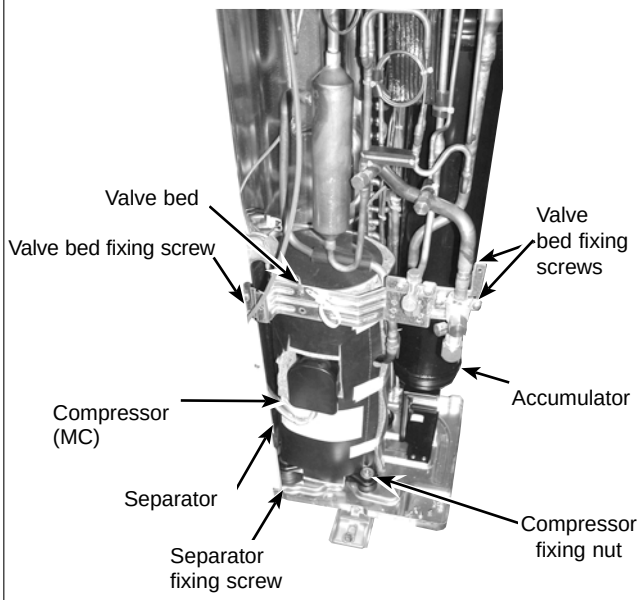
13. Removing the accumulator (1) Remove the service panel. (See figure 1.) (2) Remove the top panel. (See figure 1.) (3) Remove 2 front cover panel fixing screws (5 × 10) and remove the front cover panel. (See photo 3.) (4) Remove 2 back cover panel fixing screws (5 × 10) and remove the back cover panel. (5) Remove the electrical parts box. (See photo 3.) (6) Remove 3 valve bed fixing screws (4 × 10) and 4 ball valve and stop valve fixing screws (5 × 16) and then remove the valve bed. (7) Remove 3 right side panel fixing screw (5 × 10) in the rear of the unit and then remove the right side panel. (8) Recover refrigerant. (9) Remove 4 welded pipes of power receiver inlet and outlet. (10) Remove 2 receiver leg fixing screws (4 × 10). (See photo 13.) **Note: Recover refrigerant without spreading it in the air.**	**Photo 12** 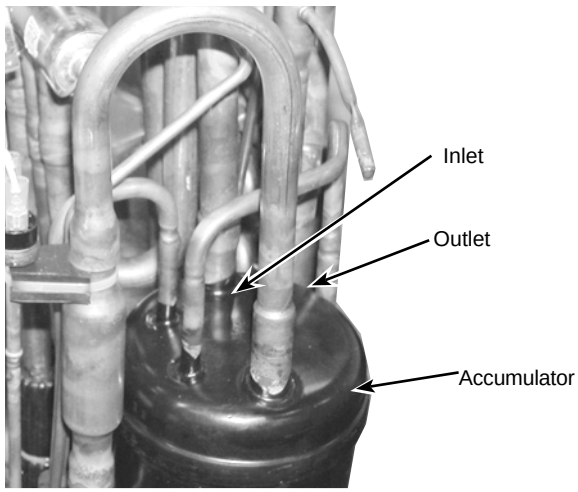 **Photo 13** 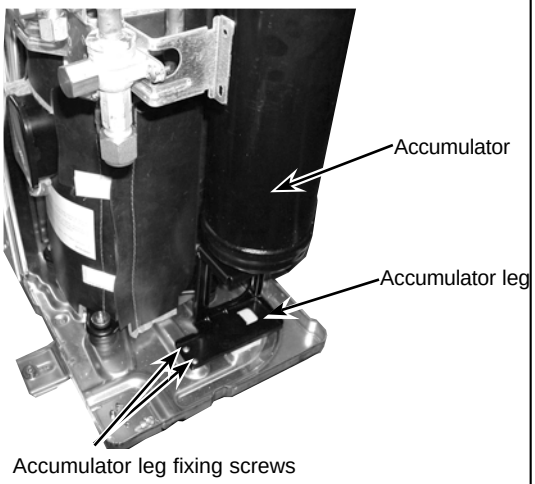

13 PARTS LIST

13-1. STRUCTURAL PARTS
PUMY-P48NHMU
PUMY-P48NHMU-BS
PUMY-P48NHMU$_1$
PUMY-P48NHMU$_1$-BS

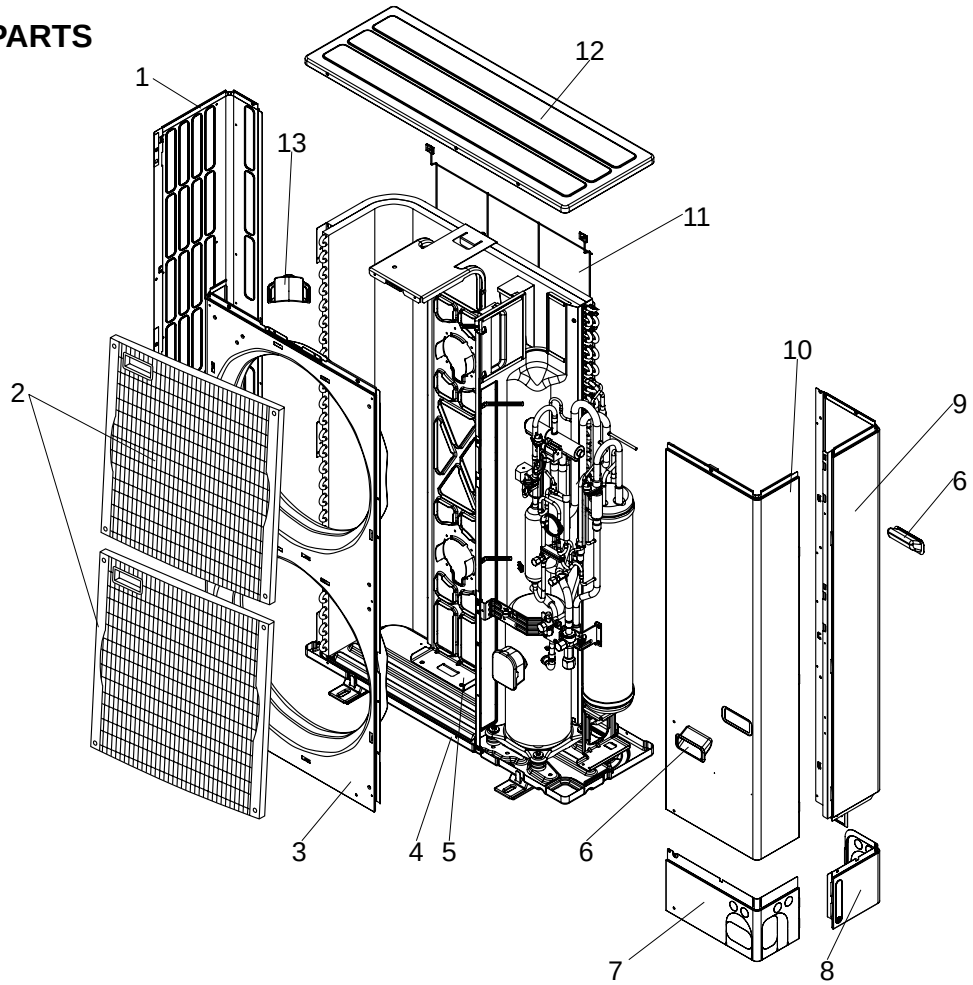

※ Parts of PUMY-P48NHMU are set as the same service parts as PUMY-P48NHMU-BS.

No.	Part No.	Part Name	Specification	Q'ty/set PUMY-P48 NHMU(-BS)	Q'ty/set PUMY-P48 NHMU$_1$(-BS)	Remarks (Drawing No.)	Wiring Diagram Symbol	Recom-mended Q'ty
1	R01 E04 662	SIDE PANEL (L)		1	1			
2	T7W E02 691	FAN GRILLE		2	2			
3	T7W E04 667	FRONT PANEL		1	1			
4	R01 E18 686	BASE ASSY		1				
	R01 E26 686	BASE ASSY			1			
5	R01 E19 130	MOTOR SUPPORT		1	1			
6	R01 30L 655	HANDLE		2	2			
7	T7W E01 658	COVER PANEL (FRONT)		1		Including CONDUIT PLATE		
	R01 E14 658	COVER PANEL (FRONT)			1	Including CONDUIT PLATE		
8	T7W E00 658	COVER PANEL (REAR)		1		Including CONDUIT PLATE		
	R01 E05 658	COVER PANEL (REAR)			1	Including CONDUIT PLATE		
9	T7W E16 661	SIDE PANEL (R)		1	1			
10	T7W E06 668	SERVICE PANEL		1	1			
11	R01 E01 698	REAR GUARD		1	1			
12	R01 E06 641	TOP PANEL		1	1			
13	R01 E00 655	HANDLE		1	1			

13-2. FUNCTIONAL PARTS

PUMY-P48NHMU PUMY-P48NHMU$_1$
PUMY-P48NHMU-BS PUMY-P48NHMU$_1$-BS

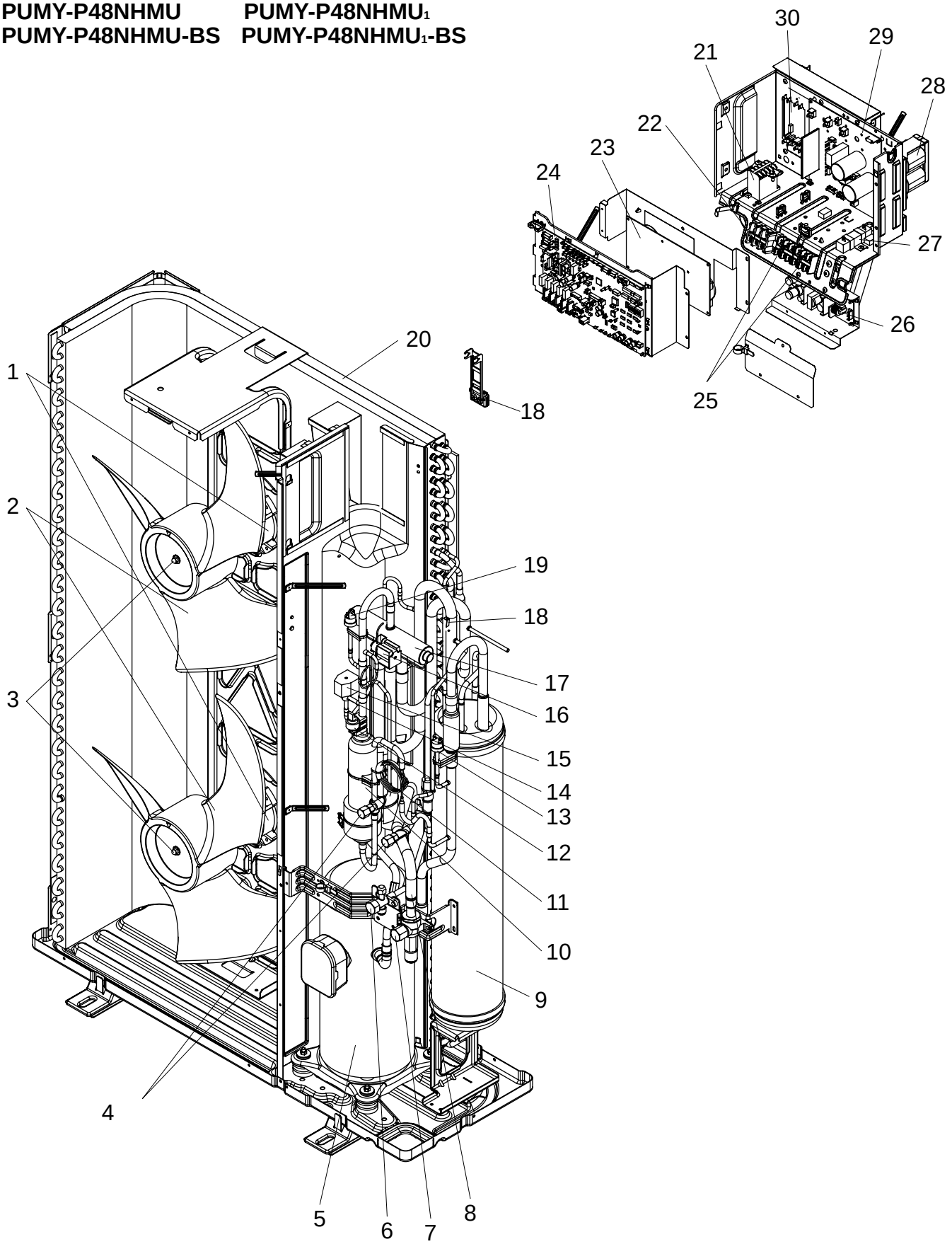

Part numbers that are circled are not shown in the figure.

No.	Part No.	Part Name	Specification	Q'ty/set PUMY-P48NHMU(1) PUMY-P48NHMU(1)-BS	Remarks (Drawing No.)	Wining Diagram Symbol	Recom-mended Q'ty
1	R01 E44 221	FAN MOTOR		2		MF1,2	
2	R01 E01 115	PROPELLER FAN		2			
3	R01 E02 097	NUT		2			
4	T7W E07 413	CHARGE PLUG		2			
5	T97 410 742	COMPRESSOR	ANB33FDCMT Including RUBBER MOUNT	1		MC	
6	T7W E04 410	STOP VALVE	3/8	1			
7	T7W E06 411	BALL VALVE	5/8	1			
8	R01 E03 450	STRAINER		1			
9	R01 E35 440	ACCUMULATOR		1			
10	T7W E02 490	OIL SEPARATOR		1			
11	R01 E22 425	CAPILLARY TUBE		1	ϕ2.5×ϕ0.8×1000mm [ϕ(3/32) × ϕ(1/32) × L(39-1/2)]inch		
12	T7W E04 208	H.P SENSOR		1		63HS	
13	R01 25T 209	LOW PRESSURE SWITCH		1		63L	
14	T7W E03 428	BYPASS VALVE		1			
15	T7W E17 242	SOLENOID COIL <BYPASS VALVE>		1		SV1	
16	T7W E18 242	SOLENOID COIL <4-WAY VALVE>		1		21S4	
17	T7W E05 403	4-WAY VALVE		1			
18	R01 E75 202	THERMISTOR		1		TH6,7	
19	T7W E05 208	HIGH PRESSURE SWITCH		1		63H	
20	T7W E29 408	HEAT EXCHANGER		1			
21	T7W E02 259	CONTACTOR		1		52C	
22	T7W 850 716	TERMINAL BLOCK	3P (L1,L2,GR)	1		TB1	
23	T7W E14 346	NOISE FILTER CIRCUIT BOARD		1		N.F.	
24	R01 H76 310	MULTI CONTROLLER CIRCUIT BOARD		1		MULTI.B.	
25	T7W E17 716	TERMINAL BLOCK	3P (M1, M2, S)	2		TB3, TB7	
26	R01 E01 311	TRANSMISSION POWER BOARD		1		M-P.B.	
27	T7W E01 234	RESISTOR		1		RS	
28	T7W E09 259	REACTOR		1		DCL	
29	T7W E26 313	POWER CIRCUIT BOARD		1		P.B.	
30	T7W E01 233	ACT MODULE		1		ACTM	
31	T7W E09 254	MAIN SMOOTHING CAPACITOR		1		CB	
32	R01 E66 202	THERMISTOR (OUTDOOR PIPE)		1		TH3	
33	R01 E00 201	THERMISTOR (DISCHARGE)		1		TH4	
34	R01 E65 202	THERMISTOR (HEATSINK)		1		TH8	

14 RoHS PARTS LIST

14-1. FUNCTIONAL PARTS

PUMY-P36NHMU **PUMY-P48NHMU$_2$**
PUMY-P36NHMU-BS **PUMY-P48NHMU$_2$-BS**

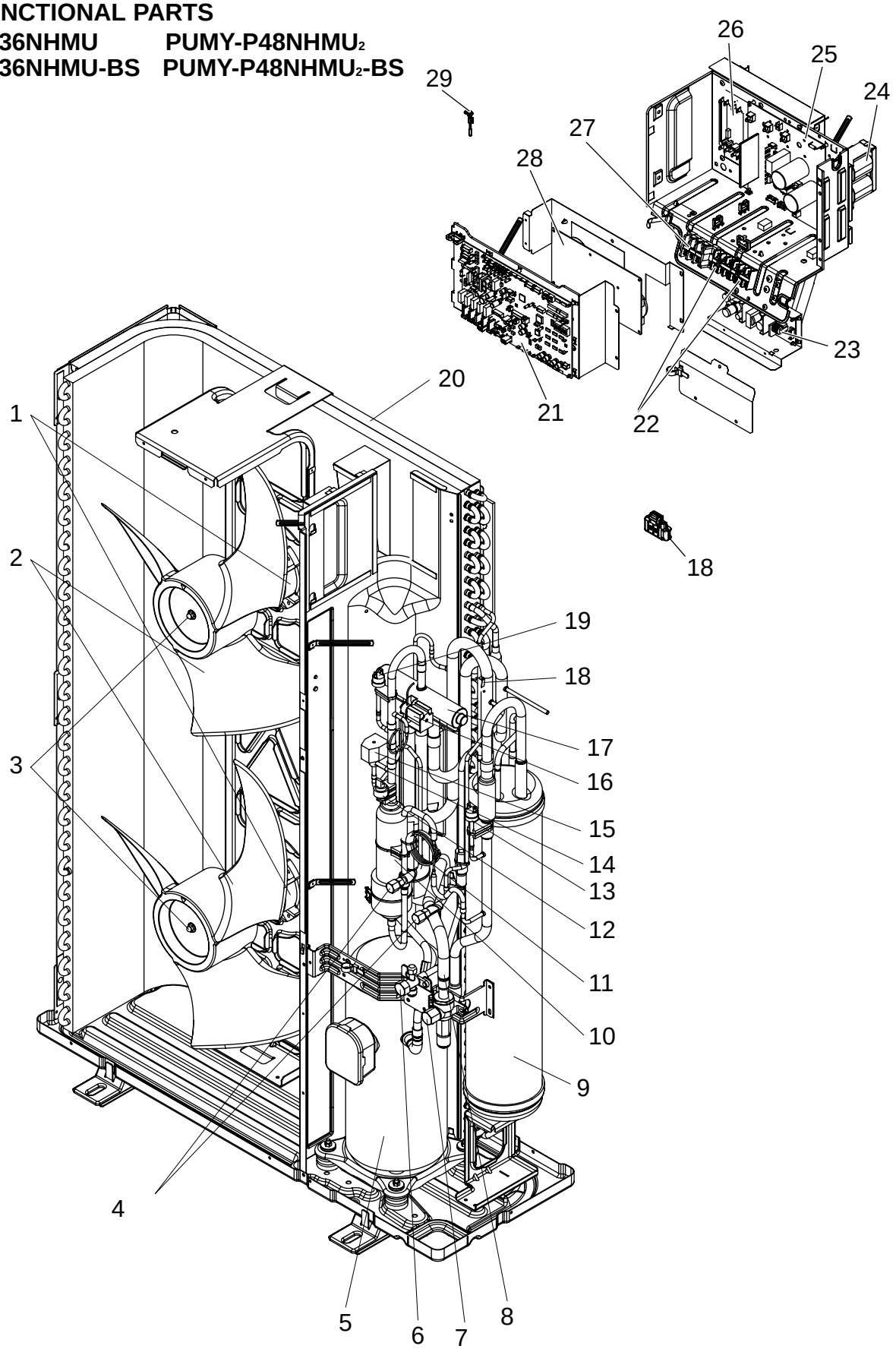

Part numbers that are circled are not shown in the figure.

No.	RoHS	Part No.	Part Name	Specification	Q'ty/set PUMY-P36NHMU(-BS) PUMY-P48NHMU2(-BS)	Remarks (Drawing No.)	Wining Diagram Symbol	Recom-mended Q'ty
1	G	T7W E27 763	FAN MOTOR		2		MF1,2	
2	G	R01 E08 115	PROPELLER FAN		2			
3	G	R01 E09 097	NUT		2			
4	G	T7W E07 413	CHARGE PLUG		2			
5	G	T97 415 755	COMPRESSOR	ANB33FDHMT Including RUBBER MOUNT	1		MC	
6	G	T7W E04 410	STOP VALVE	3/8	1			
7	G	T7W E06 411	BALL VALVE	5/8	1			
8	G	R01 E06 450	STRAINER		1			
9	G	R01 E44 440	ACCUMULATOR		1			
10	G	T7W E02 490	OIL SEPARATOR		1			
11	G	R01 E26 425	CAPILLARY TUBE	ϕ2.5×ϕ0.8×1000mm [ϕ(3/32) × ϕ(1/32) × L(39-1/2)]inch	1			
12	G	R01 E07 208	H.P SENSOR		1		63HS	
13	G	R01 E00 209	LOW PRESSURE SWITCH		1		63L	
14	G	T7W E03 428	BYPASS VALVE		1			
15	G	T7W E17 242	SOLENOID COIL <BYPASS VALVE>		1		SV1	
16	G	T7W E18 242	SOLENOID COIL <4-WAY VALVE>		1		21S4	
17	G	T7W E05 403	4-WAY VALVE		1			
18	G	R01 H01 202	THERMISTOR		1		TH6,7	
19	G	T7W E07 208	HIGH PRESSURE SWITCH		1		63H	
20	G	T7W E41 408	HEAT EXCHANGER		1			
21	G	R01 N54 310	CONTROLLER CIRCUIT BOARD		1		C.B.	
22	G	R01 E27 246	TERMINAL BLOCK	3P (M1, M2, S)	2		TB3, TB7	
23	G	R01 E02 311	M-POWER BOARD		1		M-NET.P.B.	
24	G	R01 E20 259	REACTOR		1		DCL	
25	G	R01 E64 313	POWER CIRCUIT BOARD		1		P.B.	
26	G	R01 E07 233	ACT MODULE		1		ACTM	
27	G	T7W E45 716	TERMINAL BLOCK	3P (L1,L2,GR)	1		TB1	
28	G	R01 E18 346	NOISE FILTER CIRCUIT BOARD		1		N.F.	
29	G	R01 E99 202	THERMISTOR (HEATSINK)		1		TH8	
30	G	R01 E22 255	MAIN SMOOTHING CAPACITOR		1		CE	
31	G	R01 H00 202	THERMISTOR (OUTDOOR PIPE)		1		TH3	
32	G	R01 E12 201	THERMISTOR (DISCHARGE)		1		TH4	
33	G	R01 E06 239	FUSE	250V, 6.3A	2		F1, 2	

14-2. STRUCTURAL PARTS

PUMY-P36NHMU
PUMY-P36NHMU-BS
PUMY-P48NHMU$_2$
PUMY-P48NHMU$_2$-BS

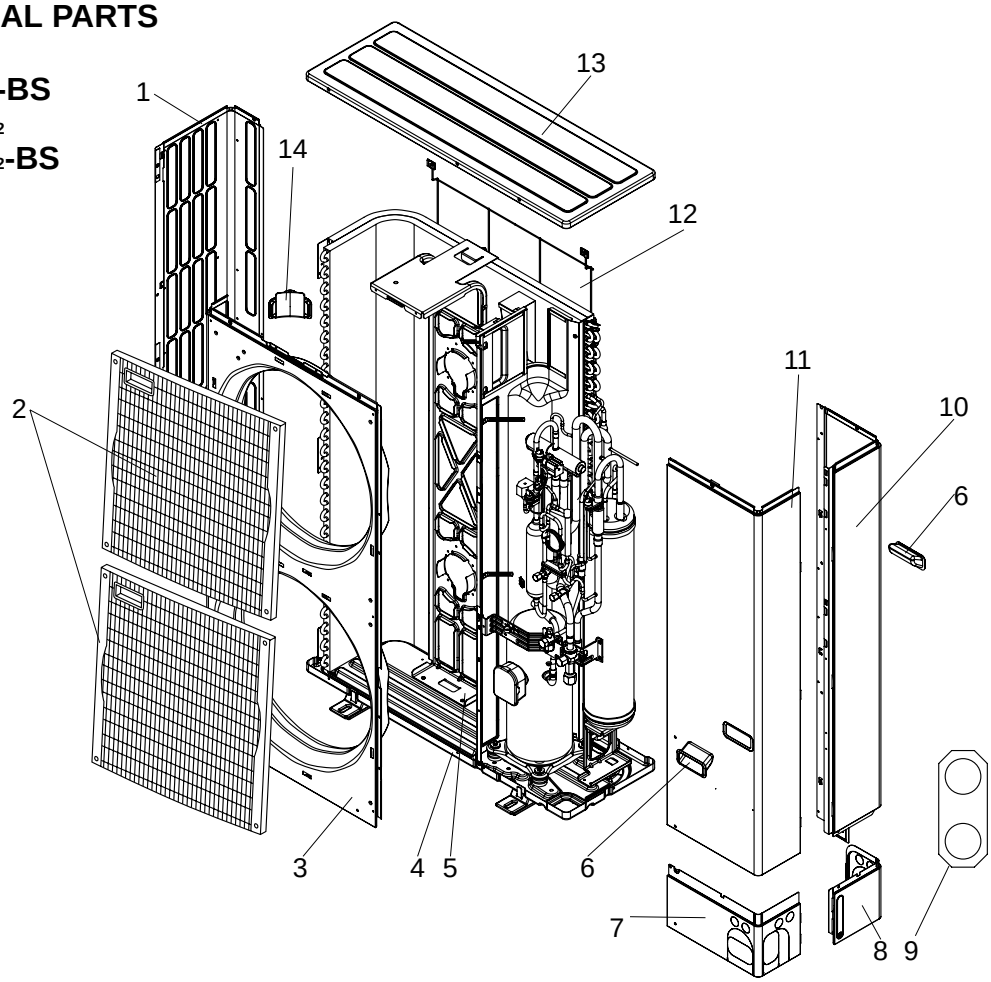

※ Parts of PUMY-P36/48NHMU are set as the same service parts as PUMY-P36/48NHMU-BS.

No.	RoHS	Part No.	Part Name	Specification	Q'ty/set PUMY-P36 NHMU(-BS)	Q'ty/set PUMY-P48 NHMU$_2$(-BS)	Remarks (Drawing No.)	Wiring Diagram Symbol	Recom-mended Q,ty
1	G	T7W E03 662	SIDE PANEL (L)		1	1			
2	G	T7W E03 691	FAN GRILLE		2	2			
3	G	T7W E06 667	FRONT PANEL		1	1			
4	G	R01 E31 686	BASE ASSY		1	1			
5	G	R01 E27 130	MOTOR SUPPORT		1	1			
6	G	R01 E01 655	HANDLE		2	2			
7	G	R01 E13 658	COVER PANEL (FRONT)		1	1			
8	G	R01 E11 658	COVER PANEL (REAR)		1	1			
9	G	T7W E01 617	CONDUIT PLATE		1	1			
10	G	T7W E19 661	SIDE PANEL (R)		1	1			
11	G	T7W E08 668	SERVICE PANEL		1	1			
12	G	R01 E07 698	REAR GUARD		1	1			
13	G	R01 E14 641	TOP PANEL		1	1			
14	G	R01 E02 655	HANDLE		1	1			

15 OPTIONAL PARTS

DRAIN SOCKET

Part No.	PAC-SG61DS-E

AIR OUTLET GUIDE

Part No.	PAC-SG59SG-E

※ Need 2 pieces.

AIR GUIDE

Part No.	PAC-SH63AG-E

※ Need 2 pieces.

DRAIN PAN

Part No.	PAC-SG64DP-E

BRANCH PIPE (Joint)

Part No.	NUMBER OF BRANCHING POINTS
CMY-Y62-G-E	2
CMY-Y64-G-E	4
CMY-Y68-G-E	8

CITY MULTI ™

MITSUBISHI ELECTRIC CORPORATION
HEAD OFFICE : TOKYO BLDG., 2-7-3, MARUNOUCHI, CHIYODA-KU, TOKYO100-8310, JAPAN

©Copyright 2008 MITSUBISHI ELECTRIC ENGINEERING CO., LTD.
Distributed in Jul. 2008 No. OC366 REVISED EDITION-C PDF 7
Distributed in Dec. 2007 No. OC366 REVISED EDITION-B PDF 9
Distributed in Apr. 2006 No. OC366 REVISED EDITION-A PDF 10
Distributed in Jan. 2006 No. OC366 PDF 10
Made in Japan

New publication, effective Jul. 2008
Specifications subject to change without notice